TOWN OF AUSTERLITZ

Columbia County
New York

Lee Tilden — Planning Board Chairman

Planning Board Meeting
May 5, 2022
7:00 p.m.

************AGENDA************

1.) Call Planning Board Meeting to Order

2.) Moment of Silence, Followed by the Pledge of Allegiance

3.) Roll Call

4.) Minutes

5.) PUBLIC HEARING:

A.) PL-2022-06 – Caroline Jackson / Eric Wegerbauer
- **Minor Subdivision (Richard Sardo – Land Surveyor)**

6.) OLD BUSINESS:

A.) PL-2022-01 Austerlitz Holding Co., LLC / Max Zacker
- **Minor subdivision**
- ***Property line adjustment?***

7.) NEW BUSINESS:

A.) PL-2022-09 Andra Miller – Represented by SunCommon
- **Residential home solar electric system**

B.) Reginald Brantner – PL-2022-10 – Represented by Frederick Haley
- **Minor Subdivison**

7.) Public Comment

8.) Adjournment

Minutes from 4-7-22 Planning Board Meeting

Town of Austerlitz
Planning Board Meeting
April 7, 2022

The Planning Board Meeting was held in-person.

Present: Lee Tilden, Chairman. Deborah Lans, Eric Sieber, Jane Magee, Eric Spiegel, Members.
Also Present: Tiffeny Cantu, Planning Board Clerk

Joseph Catalano, Attorney for the Town present.

Pledge of Allegiance, followed by a Moment of Silence

Regular Meeting called to order at 7:04 p.m.

Minutes
A motion to accept the March 3, 2022 regular Planning Board Meeting minutes was made by Eric Sieber and seconded by Jane Magee.
Lee Tilden – Aye
Deborah Lans – Aye
Eric Sieber – Aye
Jane Magee – Aye
Eric Spiegel – abstain due to tonight's meeting being his first meeting as a Planning Board member.
Motion carried: 4:1

A motion to accept the February 22, 2022 Public Hearing / Special Meeting minutes was made by Jane Magee and seconded by Eric Sieber.
Lee Tilden – Aye
Deborah Lans – abstained due to not being present at this meeting
Eric Sieber – Aye
Jane Magee – Aye
Eric Spiegel – abstained due to tonight's meeting being his first meeting as a Planning Board member.
Minutes Approved: 3:2

New Business
Planning Board Application PL-2022-06
Property Owners: Caroline Jackson / Eric Wegerbauer
Applicant: Caroline Jackson / Eric Wegerbauer - Richard Sardo
Representative: Richard Sardo, Sardo Land Surveying
Project Property: 607 Stonewall Road, East Chatham, NY 12060 – Portion of 68.-1-4
Zoning: Rural Residential
Project: Minor Subdivision

Chairman Tilden asks Mr. Sardo to discuss the project. The request is to subdivide existing property into three parcels. Mr. Sardo shares his maps and describes the parcels and existing right of way to the rear of the property. There is one parcel with an existing residence and existing right of way – a gravel driveway. In the past, these parcels were consolidated but now they want to parcel it out again but make it two lots instead of one. The third parcel would be the "remainder" land shown on the map. There is discussion with Joe Catalano about the access and frontage.

Chairman Tilden confirms with Mr. Sardo that this is indeed a subdivision of technically 3 lots and Mr. Sardo confirms, yes.

Chairman Tilden asks about the deed and if all 3 parcels are on the deed. Mr. Sardo says the deed describes two parcels – but this is the current parcels 1 & 2 together plus the remainder. The remainder would be considered Parcel 3.

Chairman Tilden asks Mr. Sardo when the consolidation happened. Mr. Sardo guesses it was more than 10 years ago. Mr. Sardo offered to get the correct amount of years.

Chairman Tilden asks Joe Catalano if the easement should be affected by the new subdivision law recently passed and Mr. Catalano says it does not appear to be. Mr. Sardo explains the easement was used to access both lots.

There is discussion about length of time on subdivision laws.

Chairman Tilden talks through the application and asks the Planning Board if anyone has any other questions. Joe Catalano points out a note that needs to be fixed on the map by Mr. Sardo.

Chairman Tilden asks about a SEQRA designation – Joe Catalano confirms this is an unlisted action.

A motion is made by Deborah Lans to designate this project an unlisted action under SEQRA and the motion is seconded by Jane Magee.
Lee Tilden – Aye
Deborah Lans – Aye
Jane Magee – Aye
Eric Sieber – Aye
Eric Spiegel - Aye
Motion Carried: 5:0

Joseph Catalano asks for details about the note referring to the Northern Long Eared Bat in the EAF. Chairman Tilden asks if the DEC needs to be brought in as an involved agency. Joseph Catalano says the Planning Board needs to know what the note about the Bat actually means. Mr. Sardo says construction work limitations are usually during mating season and that he can make a note of this on the map. Chairman Tilden confirms that this note of construction work

limitations during the Bat mating season would be a condition of approval by the Planning Board and passed on to the Code Enforcement Officer.

Mr. Sardo states that the condition with this particular Bat is that you cannot do land clearing during the mating season. The mating season dates need to be confirmed.

Deborah Lans asks to confirm if the Planning Board should have the written law that protects the bats to be included in the resolution. Joseph Catalano says yes. Discussion continues about land clearing and the Bat habitat. Chairman Tilden discusses that the condition regarding the Bat habitat is important to include in the resolution because the Planning Board needs to be forward thinking and making sure any future owners of the property know about this condition. Mr. Sardo agrees and also states he will make this note on the map as well.

A motion is made by Deborah Lans to accept the application and supporting materials as complete and is seconded by Jane Magee.
Roll Call:
Lee Tilden – Aye
Deborah Lans- Aye
Jane Magee – Aye
Eric Sieber – Aye
Eric Spiegel – Aye
Motion carried: 5:0

A motion is made by Eric Sieber to schedule a public hearing for public comment on the application for subdivision 2022-06 as the first order of business at the regular Planning Board meeting on Thursday, May 5th at 7pm and is seconded by Eric Spiegel.
Roll Call:
Lee Tilden – Aye
Deborah Lans – Aye
Jane Magee – Aye
Eric Sieber – Aye
Eric Spiegel - Aye
Motion Carried: 5:0

Mr. Sardo will need a form letter to send out and will return the cards that are sent out to the Planning Board Clerk.

Tiffeny Cantu can email the form letter to Mr. Sardo. Mr. Sardo's list of adjoining property owners does include neighbors across the street. Joseph Catalano suggests Mr. Sardo add these property owners to his map as well.

Joseph Catalano will write the form letter and public notice and send to Tiffeny Cantu.

New Business

Planning Board Application - ***currently no number has been applied***

Property Owners: Paula Bednarcik
Applicant: Estate of Gloria Oleynek – Paula Bednarcik
Representative: Paula Bednarcik
Project Property: Indian Trail private road
Zoning: Rural Residential
Project: Major Subdivision

Chairman Tilden asks the Oleynek family to speak about their project. Sue Geel speaks for the family reviewing the history up to this point. Ms. Geel states they are asking for a minor subdivision and explains that the plan for the land was to give each child a parcel and that their Father started the process many years ago and shares a hand drawn map representing their plan.

The Oleynek family currently has 5 parcels and they want to make changes to then have 6 parcels. Chairman Tilden confirms that in 2008 that there is a condition in the subdivision approval that if there is any further subdivision that their private road needs to be brought up to Town Code. Mr. Tilden confirms this is a condition that cannot be overlooked. Eric Sieber asks about culvert measurements and the Oleynek family says they passed all of the culvert inspections.

Chairman Tilden asks about the phone call to Peter Fitzpatrick. Also at the time, Peter Fitzpatrick received a package of documents from Attorney, Bill Better who had also talked with Joseph Catalano about the project. The Oleynek family states that Bill Better is no longer their lawyer because he was not making any progress. They then read a letter that they brought with them. It is mentioned that back in 2008, Robert Meehan and Fred Oleynek used an 18' pole and walked the full length of Indian Trail to confirm that there were no sections on the road that were less than 18' wide except for where the utility pole is located and the road was approved by Mr. Meehan. There is also discussion by the Oleynek Family that the road has enough room for emergency vehicles to access it.

Joseph Catalano discusses that all of the information is very well stated but that this Planning Board has to consider the condition of the previous plan from 2008 and the current Town Code which cuts off the amount of lots that can be accessed by a private road to 5. Mr. Catalano says that he did explain to their attorney, Bill Better, that there is a way to grant a variance but only upon approval by the Town Board and the Highway Superintendent and this has to happen before the PB can approve anything.

Joseph Catalano says the Planning Board cannot accept the hand drawn map presented by the Oleynek's as an approved subdivision map. The Oleynek's first confirm that the land is going to be surveyed but then discuss that their surveyor says it may be a mute point if the project is not approved and that he is expensive. Mr. Catalano and Chairman Tilden confirm that a formal survey map is required. The Oleynek family does state that Bill Better is no longer their attorney.

Chairman Tilden and Joseph Catalano talk about details.

Joseph Catalano confirms that there are next steps and proceeds to read law about Town Code and then summarizes these steps for the Oleynek's.

Eric Sieber states that he feels that Peter Fitzpatrick should voice his opinion first to see if he has any issues with the Road.

Joseph Catalano says he will ask Peter to drive to this location and provide opinion to the Planning Board for the next scheduled meeting. Mr. Catalano then states that the Planning Board will then have the opinion of the Highway Superintendent to then make a resolution to the Town Board. Chairman Tilden asks for photos and documentation, copies of all deeds, an official completed application with payment and the SEQRA short form.

Joseph Catalano confirms that final decisions can't be made until all aspects are covered and that multiple approvals are required.

Chairman Tilden confirms that a formal map must be provided at some point to move this forward.

Public Comment None

Tiffeny Cantu offers a reminder to the Planning Board that education hours are required and once it is completed to please send copies of the certificates.

Next meeting is scheduled for 5/5/22

Adjournment
A motion to adjourn was made at 7:58pm by Eric Sieber and seconded by Jane Magee.
Lee Tilden – Aye
Deborah Lans – Aye
Eric Sieber – Aye
Jane Magee – Aye
Eric Spiegel – Aye
Motion carried: 5:0 Meeting adjourned at 7:58pm.

Respectfully Submitted,
Tiffeny Cantu, Planning Board Clerk

DRAFT

PL-2022-06

Sardo Land Surveying

Jackson / Wegerbauer

Minor Subdivision

April __, 2022

Via Certified Mail, Return Receipt Requested

To: Name & address of property owner listed on subdivision application

Re: Notice of Hearing of Town of Austerlitz Planning Board

Dear Property Owner:

You have been identified as an owner of property adjacent to a parcel of property located on the west side of Stonewall Road in the Town of Austerlitz (607 Stonewall Road; Tax Map #68.00-1-4) owned by the Eric Wegerbauer Revocable Trust and the Caroline Jackson Revocable Trust. The applicant proposes to divide 2 lots off of an existing 68-acre parcel with lot 1 proposed at 3.07 acres and lot 2 proposed at 3.0 acres in size. Lot 2 has a residence and Lot 1 is currently unimproved. The subject property is located in the rural residential zoning district.

This letter is to notify you that the Town Planning Board has scheduled a public hearing on this application to be held on May 5, 2022 at 7:00 pm for the purpose of providing an opportunity for all those wishing to comment on this application. Written comments will also be accepted at the hearing or prior to the hearing via email to the Planning Board Clerk. In-person attendance to this hearing is required - masks required for unvaccinated attendees and may be required for all attendees. If you wish to review a copy of the application, please contact the Planning Board Clerk, Tiffeny Cantu at 518-392-3260 x301 or at tcantu@austerlitzny.com.

Written comments will be accepted at the hearing by hand or prior to the hearing via email to the Planning Board Clerk.

Sincerely,

Richard W. Sardo, P.L.S.
Sardo Land Surveying
on behalf of Austerlitz Planning Board

COPY

NOTICE OF PUBLIC HEARING
TOWN OF AUSTERLITZ PLANNING BOARD

PLEASE TAKE NOTICE that the Planning Board of the Town of Austerlitz will hold a Public Hearing on a minor subdivision application for property located on the west side of Stonewall Road in the Town of Austerlitz (Tax Map #68.00-1-4) owned by the Eric Wegerbauer Revocable Trust and the Caroline Jackson Revocable Trust. The applicant proposes to divide 2 lots off of an existing 68-acre parcel with lot 1 proposed at 3.07 acres and lot 2 proposed at 3.0 acres in size. Lot 2 has a residence and Lot 1 is currently unimproved. The subject property is located in the rural residential zoning district. The Public Hearing on the application will be held on May 5, 2022 at 7:00 pm for the purpose of providing an opportunity for all those wishing to comment on this application. Written comments will also be accepted at the hearing or prior to the hearing via email to the Planning Board Clerk. In-person attendance to this hearing is required - masks required for unvaccinated attendees and may be required for all attendees. If you wish to review a copy of the application, please contact the Planning Board Clerk, Tiffeny Cantu at 518-392-3260 x301 or at tcantu@austerlitzny.com. By Motion of the Planning Board of the Town of Austerlitz

COPY

AFFIDAVIT OF PUBLICATION

Hudson Register Star

State of New York,

County of, Jefferson,

The undersigned is the authorized designee of **Hudson Register Star**, a **Daily** Newspaper published in **Columbia** County, **New York**. I certify that the public notice, a printed copy of which is attached hereto, was printed and published in this newspaper on the following dates:

April 20, 2022

This newspaper has been designated by the County Clerk of **Columbia** County, as a newspaper of record in this county, and as such, is eligible to publish such notices.

Eliot T. Putnam

Signature

Eliot T. Putnam

Printed Name

Subscribed and sworn to before me,

This 21 day of April 2022

Notary Signature

Notary Public Stamp

DOUGLAS W. REA
STATE OF NEW YORK
NOTARY PUBLIC
ALBANY
01RE6398443
MY COMMISSION EXPIRES 09/30/2023

COPY

AFFIDAVIT OF PUBLICATION

Hudson Register Star

NOTICE OF PUBLIC HEARING
TOWN OF AUSTERLITZ
PLANNING BOARD
PLEASE TAKE NOTICE that the Planning Board of the Town of Austerlitz will hold a Public Hearing on a minor subdivision application for property located on the west side of Stonewall Road in the Town of Austerlitz (Tax Map #68.00-1-4) owned by the Eric Wegerbauer Revocable Trust and the Caroline Jackson Revocable Trust. The applicant proposes to divide 2 lots off of an existing 68-acre parcel with lot 1 proposed at 3.07 acres and lot 2 proposed at 3.0 acres in size. Lot 2 has a residence and Lot 1 is currently unimproved. The subject property is located in the rural residential zoning district. The Public Hearing on the application will be held on May 5, 2022 at 7:00 pm for the purpose of providing an opportunity for all those wishing to comment on this application. Written comments will also be

COPY

AFFIDAVIT OF PUBLICATION

Hudson Register Star

accepted at the hearing or prior to the hearing via email to the Planning Board Clerk. In-person attendance to this hearing is required - masks required for unvaccinated attendees and may be required for all attendees. If you wish to review a copy of the application, please contact the Planning Board Clerk, Tiffeny Cantu at 518-392-3260 x301 or at tcantu@austerlitzny.com.

By Motion of the Planning Board of the Town of Austerlitz

COPY

Town of Austerlitz
Planning Board
Application for Subdivision Review

Application Date: __/__/____

Applicant: (Property Owner)

Name: JACKSON / WEGERBAUER Email: carolinejackson@gmail.com ericwegerbauer@gmail.com

Street Address: 607 STONEWALL ROAD Mailing Address: _____

City: EAST GLOTHAM State: NY Zip: 12060 Phone Number: _____

Representative: (If Any)

Name: RICHARD SARDO Email: rsardopls@aol.com

Phone Number: _____

Surveyor or Engineer:

Name: RICHARD SARDO

Phone Number: 518-821-9547 License Number: 050560

Tax Map Number: PORTION OF 68.00-1-4

Property Location: (Brief Description of Location)

WEST SIDE OF STONEWALL ROAD NORTH OF MACEDONIA ROAD

Names of Abutting Property Owners:

SEE ATTACHED

Easements or Restriction:

DEED ATTACHED

The undersigned hereby requests approval by the Planning Board of the above identified subdivision Plat.

Signature: Caroline Jackson

Title: Eric Wegerbauer

Date: 3-19-22

FOR OFFICE USE ONLY Project ID _____

SUBMISSION DATES and APPROVALS

Applic, Fees & Preliminary	Public Hearing	SEQRA Determination	Final Approval

TOWN OF AUSTERLITZ RECEIVED MAR 23 2022 PLANNING BOARD COLUMBIA COUNTY

617.20
Appendix B
Short Environmental Assessment Form

Instructions for Completing

Part 1 - Project Information. The applicant or project sponsor is responsible for the completion of Part 1. Responses become part of the application for approval or funding, are subject to public review, and may be subject to further verification. Complete Part 1 based on information currently available. If additional research or investigation would be needed to fully respond to any item, please answer as thoroughly as possible based on current information.

Complete all items in Part 1. You may also provide any additional information which you believe will be needed by or useful to the lead agency; attach additional pages as necessary to supplement any item.

Part 1 - Project and Sponsor Information

Name of Action or Project:
SUBDIVISION

Project Location (describe, and attach a location map):
607 STONE MILL ROAD AUSTERLITZ PORTION OF APN 68.00-1-4

Brief Description of Proposed Action:
SUBDIVISION OF AN APPROXIMATELY 68 ACRE PARCEL INTO 1) 3.07 ACRES 2) 3.00 ACRES AND 3) 61.80 ACRE REMAINDER PARCEL

Name of Applicant or Sponsor:	Telephone:
ERIC WEGERBAUER / CAROLINE JACKSON	E-Mail: carolinejackson@gmail.com

Address:
607 STONE MILL ROAD

City/PO:	State:	Zip Code:
EAST CHATHAM	NY	12060

	NO	YES
1. Does the proposed action only involve the legislative adoption of a plan, local law, ordinance, administrative rule, or regulation? If Yes, attach a narrative description of the intent of the proposed action and the environmental resources that may be affected in the municipality and proceed to Part 2. If no, continue to question 2.	☑	☐
2. Does the proposed action require a permit, approval or funding from any other governmental Agency? If Yes, list agency(s) name and permit or approval:	☑	☐

3.a. Total acreage of the site of the proposed action? 67.8 acres
b. Total acreage to be physically disturbed? 0 acres
c. Total acreage (project site and any contiguous properties) owned or controlled by the applicant or project sponsor? 67.8 acres

4. Check all land uses that occur on, adjoining and near the proposed action.
☐ Urban ☐ Rural (non-agriculture) ☐ Industrial ☐ Commercial ☑ Residential (suburban)
☐ Forest ☐ Agriculture ☐ Aquatic ☐ Other (specify): _____
☐ Parkland

TOWN OF AUSTERLITZ RECEIVED MAR 2 3 2022 PLANNING BOARD COLUMBIA COUNTY

RESET

	NO	YES	N/A
5. Is the proposed action,			
a. A permitted use under the zoning regulations?	☐	☑	☐
b. Consistent with the adopted comprehensive plan?	☐	☑	☐
6. Is the proposed action consistent with the predominant character of the existing built or natural landscape?	NO ☐	YES ☑	
7. Is the site of the proposed action located in, or does it adjoin, a state listed Critical Environmental Area? If Yes, identify:	NO ☑	YES ☐	
8. a. Will the proposed action result in a substantial increase in traffic above present levels?	NO ☑	YES ☐	
b. Are public transportation service(s) available at or near the site of the proposed action?	☑	☐	
c. Are any pedestrian accommodations or bicycle routes available on or near site of the proposed action?	☑	☐	
9. Does the proposed action meet or exceed the state energy code requirements? If the proposed action will exceed requirements, describe design features and technologies:	NO ☑	YES ☐	
10. Will the proposed action connect to an existing public/private water supply? If No, describe method for providing potable water:	NO ☐	YES ☑	
11. Will the proposed action connect to existing wastewater utilities? If No, describe method for providing wastewater treatment:	NO ☐	YES ☑	
12. a. Does the site contain a structure that is listed on either the State or National Register of Historic Places?	NO ☑	YES ☐	
b. Is the proposed action located in an archeological sensitive area?	☑	☐	
13. a. Does any portion of the site of the proposed action, or lands adjoining the proposed action, contain wetlands or other waterbodies regulated by a federal, state or local agency?	NO ☑	YES ☐	
b. Would the proposed action physically alter, or encroach into, any existing wetland or waterbody? If Yes, identify the wetland or waterbody and extent of alterations in square feet or acres:	☑	☐	
14. Identify the typical habitat types that occur on, or are likely to be found on the project site. Check all that apply: ☐ Shoreline ☐ Forest ☑ Agricultural/grasslands ☐ Early mid-successional ☐ Wetland ☐ Urban ☐ Suburban			
15. Does the site of the proposed action contain any species of animal, or associated habitats, listed by the State or Federal government as threatened or endangered? NORTHERN LONG-EARED BAT	NO ☐	YES ☑	
16. Is the project site located in the 100 year flood plain?	NO ☑	YES ☐	
17. Will the proposed action create storm water discharge, either from point or non-point sources? If Yes, a. Will storm water discharges flow to adjacent properties? ☐ NO ☐ YES	NO ☑	YES ☐	
b. Will storm water discharges be directed to established conveyance systems (runoff and storm drains)? If Yes, briefly describe: ☐ NO ☐ YES			

TOWN OF AUSTERLITZ RECEIVED

MAR 2 3 2022 PLANNING BOARD COLUMBIA COUNTY

RESET

	NO	YES
18. Does the proposed action include construction or other activities that result in the impoundment of water or other liquids (e.g. retention pond, waste lagoon, dam)? If Yes, explain purpose and size:	☑	☐
19. Has the site of the proposed action or an adjoining property been the location of an active or closed solid waste management facility? If Yes, describe:	☑	☐
20. Has the site of the proposed action or an adjoining property been the subject of remediation (ongoing or completed) for hazardous waste? If Yes, describe:	☑	☐

I AFFIRM THAT THE INFORMATION PROVIDED ABOVE IS TRUE AND ACCURATE TO THE BEST OF MY KNOWLEDGE

Applicant/sponsor name: RICHARD SARDO Date: 3/19/2022

Signature: [illegible]

Part 2 - Impact Assessment. The Lead Agency is responsible for the completion of Part 2. Answer all of the following questions in Part 2 using the information contained in Part 1 and other materials submitted by the project sponsor or otherwise available to the reviewer. When answering the questions the reviewer should be guided by the concept "Have my responses been reasonable considering the scale and context of the proposed action?"

	No, or small impact may occur	Moderate to large impact may occur
1. Will the proposed action create a material conflict with an adopted land use plan or zoning regulations?	☐	☐
2. Will the proposed action result in a change in the use or intensity of use of land?	☐	☐
3. Will the proposed action impair the character or quality of the existing community?	☐	☐
4. Will the proposed action have an impact on the environmental characteristics that caused the establishment of a Critical Environmental Area (CEA)?	☐	☐
5. Will the proposed action result in an adverse change in the existing level of traffic or affect existing infrastructure for mass transit, biking or walkway?	☐	☐
6. Will the proposed action cause an increase in the use of energy and it fails to incorporate reasonably available energy conservation or renewable energy opportunities?	☐	☐
7. Will the proposed action impact existing: a. public / private water supplies?	☐	☐
b. public / private wastewater treatment utilities?	☐	☐
8. Will the proposed action impair the character or quality of important historic, archaeological, architectural or aesthetic resources?	☐	☐
9. Will the proposed action result in an adverse change to natural resources (e.g., wetlands, waterbodies, groundwater, air quality, flora and fauna)?	☐	☐

TOWN OF AUSTERLITZ RECEIVED MAR 23 2022 PLANNING BOARD COLUMBIA COUNTY

RESET

EAF Mapper Summary Report

Saturday, March 19, 2022 10:45 AM

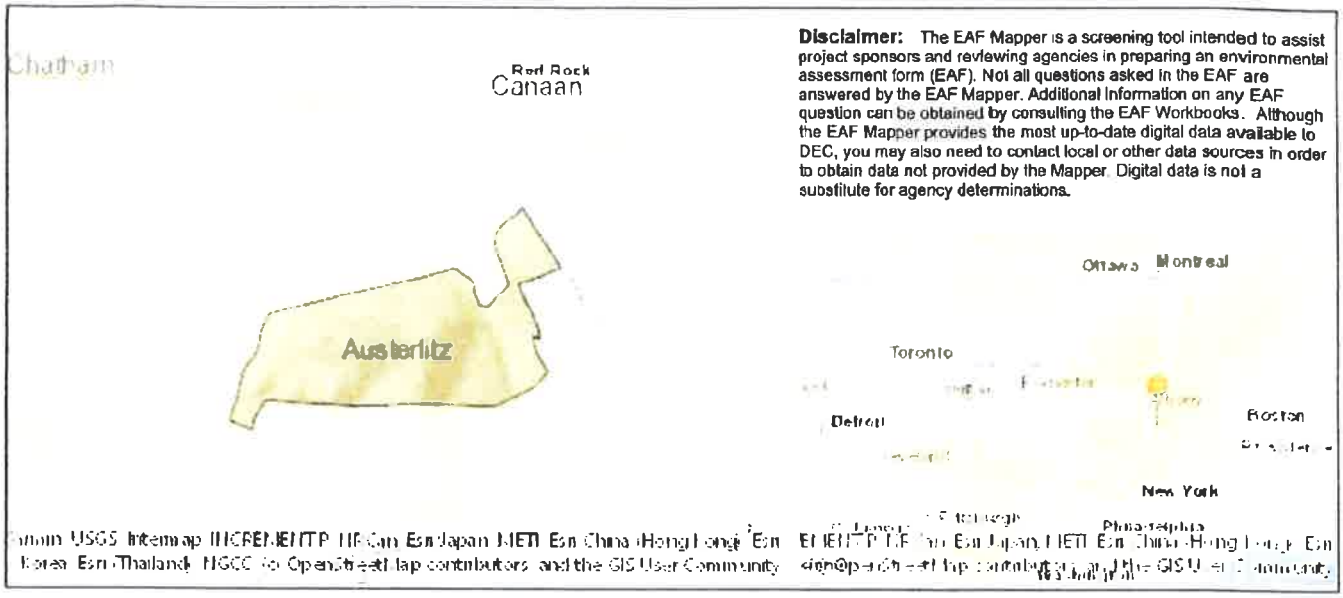

Disclaimer: The EAF Mapper is a screening tool intended to assist project sponsors and reviewing agencies in preparing an environmental assessment form (EAF). Not all questions asked in the EAF are answered by the EAF Mapper. Additional Information on any EAF question can be obtained by consulting the EAF Workbooks. Although the EAF Mapper provides the most up-to-date digital data available to DEC, you may also need to contact local or other data sources in order to obtain data not provided by the Mapper. Digital data is not a substitute for agency determinations.

Part 1 / Question 7 [Critical Environmental Area]	No
Part 1 / Question 12a [National or State Register of Historic Places or State Eligible Sites]	No
Part 1 / Question 12b [Archeological Sites]	No
Part 1 / Question 13a [Wetlands or Other Regulated Waterbodies]	Yes - Digital mapping information on local and federal wetlands and waterbodies is known to be incomplete. Refer to EAF Workbook.
Part 1 / Question 15 [Threatened or Endangered Animal]	Yes
Part 1 / Question 15 [Threatened or Endangered Animal - Name]	Northern Long-eared Bat
Part 1 / Question 16 [100 Year Flood Plain]	Digital mapping data are not available or are incomplete. Refer to EAF Workbook.
Part 1 / Question 20 [Remediation Site]	No

TOWN OF AUSTERLITZ
RECEIVED
MAR 23 2022
PLANNING BOARD
COLUMBIA COUNTY

SARDO
LAND SURVEYING

DBA R. Sardo Land Surveying Services, PLLC
135 George Road, Ghent, NY 12075 (518) 821-9547

March 19, 2022

Town of Austerlitz Planning Board
816 Route 203
PO Box 238
Spencertown, NY 12165

Re: Boundary Survey and map for subdivision of an approximate six acre portion of 68.00-1-4 in the Town of Austerlitz, County of Columbia, New York.

Dear Chairman;

Please accept this letter as notification that I have retained Richard W. Sardo, PLS to represent our interests at your planning board meetings

Sincerely;

Eric Wegerbauer
Eric Wegerbauer

Caroline Jackson
Caroline Jackson

TOWN OF AUSTERLITZ
RECEIVED
MAR 23 2022
PLANNING BOARD
COLUMBIA COUNTY

607 Stonewall Road Austerlitz

3/19/2022, 10:53:12 AM

- Columbia County
- Tax Parcels
- Lakes, Ponds, River, Large Streams
- Streams NHD
- NYS Regulated Wetlands (DEC)
- 100 foot buffer of DEC regulated Wetlands

TOWN OF AUSTERLITZ
RECEIVED
MAR 2 3 2022
PLANNING BOARD
COLUMBIA COUNTY

1:9,028

0 0.05 0.1 0.2 mi

0 0.07 0.15 0.3 km

Source: Esri, USDA FSA, NYS GIS Program Office | Telephone: (518)

Web AppBuilder for ArcGIS

This map produced using the resources of the Columbia County Planning Department

SARDO
LAND SURVEYING

135 George Road, Ghent, NY 12075 (518) 821-9547
Dba R. Sardo Land Surveying Services, PLLC *"We Monument"*

ADJOINING OWNERS TO APN 68.00-1-4

67.00-1-9.1
David Jones and Patrick Doyle
121 Pierson Road
Chatham, NY 12037

68.00-1-3
Gordon Brown
141 S Fifth St Apt 3E
Brooklyn, NY 11211

68.00-1-8 and 9
John and Mary Grayzel
110 Church Pl
Falls Church, VA 22046

68.00-1-7
Warren Cohen and Stephanie Pressman
859 West End Ave Apt 2D
New York, NY 10025

68.00-1-6 and 15.120
Stephen and Linda Lamger
P.O. Box 9
East Chatham, NY 12030

68.00-1- 5.110 and 5.200 and 29
Richard T. Sharp
129 Macedonia Road
Chatham, NY 12037

68.00-1-5.120
Karin Ford and Paul Siegel
88 Ardell Road
Bronxville, NY 10708

TOWN OF AUSTERLITZ
RECEIVED
MAR 2 3 2022
PLANNING BOARD
COLUMBIA COUNTY

68.00-1-4

WARRANTY DEED WITH FULL COVENANTS
(INDIVIDUAL AND CORPORATION)

STANDARD NYBTU FORM 8008

CAUTION: THIS AGREEMENT SHOULD BE PREPARED BY AN ATTORNEY AND REVIEWED BY ATTORNEYS FOR SELLER AND PURCHASER BEFORE SIGNING.

THIS INDENTURE, made the 1st day of February, 2017, between

ERIC M. WEGERBAUER and CAROLINE JACKSON f/k/a CAROLINE J. STEFANSKI , both residing at 607 Stonewall Road, East Chatham, New York 12060,

party of the first part,

and

ERIC WEGERBAUER, residing at 607 Stonewall Road, East Chatham, New York 12060, and CAROLINE JACKSON f/k/a CAROLINE J. STEFANSKI, residing at 607 Stonewall Road, East Chatham, New York 12060, as TRUSTEES of the REVOCABLE TRUST OF ERIC WEGERBAUER, under agreement dated July 28, 2016 (as to an undivided fifty percent interest); and CAROLINE JACKSON f/k/a CAROLINE J. STEFANSKI, residing at 607 Stonewall Road, East Chatham, New York 12060, and ERIC WEGERBAUER, residing at 607 Stonewall Road, East Chatham, New York 12060, as TRUSTEES of the REVOCABLE TRUST OF CAROLINE JACKSON, under agreement dated July 28, 2016 (as to an undivided fifty percent interest), tenants-in-common,

party of the second part,

WITNESSETH, that the party of the first part, in consideration of $10 dollars, lawful money of the United States, paid by the party of the second part, does hereby grant and release unto the party of the second part, the heirs or successors and assigns of the party of the second part forever,

ALL that certain plot, piece or parcel of land, with the buildings and improvements thereon erected, situate, lying and being in the Town of Austerlitz, County of Columbia and State of New York, known and designated as tax map parcel number 68.-1-4;

Premises being known as 607 Stonewall Road, Austerlitz, New York and more particularly described on Schedule A attached hereto.

BEING and intended to be that same premises conveyed to the party of the first part by deed from **SHARON K. KAUFMAN** dated **April 27, 2015**, and recorded in the Office of the Columbia County Clerk.

TOGETHER with all right, title and interest, if any, of the party of the first part in and to any streets and roads abutting the above described premises to the center lines thereof,

TOWN OF AUSTERLITZ RECEIVED MAR 23 2022 PLANNING BOARD COLUMBIA COUNTY

Brillers 1990

SCHEDULE "A"

PARCEL A:

ALL that certain plot, piece or parcel of land situate, lying and being in the Town of Austerlitz, County of Columbia, and State of New York, bounded and described as follows:

PARCEL 1:

BEGINNING at a point in the town road between Red Rock and Spencertown (where it runs northwest to southeast) about one-half mile southeasterly from the hamlet of Red Rock, where the boundary line between the land hereby conveyed and land of Charles Briggs intersects said town road; running thence southwesterly along an old stone fence bounding said land of Briggs to a corner (which corner is hereinafter called Station No. 1); thence southeasterly along an old barbed wire fence bounding said land of Briggs to a corner; thence southwesterly along an old barbed wire fence bounding said land of Briggs to a brook known as "South Branch"; thence northwesterly along said brook bounding Parcel 2 hereby conveyed and land of Lella H. Devoy to an old woven wire fence; thence northeasterly along said old woven wire fence bounding other lands of Lillie A. Reynolds to a large maple tree about 100 feet northwesterly from Station No. 1; thence northwesterly along an old stone fence about 275 feet to a corner; thence northeasterly along an old stone fence passing through a 12 inch maple tree in an old stone fence along said town road to said town road; thence southeasterly along said town road to the point or place of **BEGINNING;**

PARCEL 2:

BOUNDED on the north of lands of Alexander Bartlett formerly Lucius Harmon; West by lands of Patrick Doyle, formerly Catherine Nolan, South by lands formerly in the possession of William H. Ten Broeck and lands formerly of Patrick Lynch and lands of Charles Briggs formerly of Laban Holdridge; and East by lands of Charges Briggs;

ALSO, a lot of land described as follows: Beginning at a corner of "Parcel 1" conveyed by Lillie A. Reynolds to Walter Wilson and Fannie Wilson by deed dated September 15, 1941, recorded in the Columbia County Clerk's Office in Deed Book 254, Page 306 which corner is at the end of the sixth course decribed in said deed as "thence northwesterly along an old stone fence about 276 feet to a corner" and the beginning of the seventh course described in said deed as "thence northeasterly along an old stone fence passing through a 12 inch maple tree in an old stone fence along said town road to said town road", running thence from said point of beginning southwesterly in range with said seventh course as extended southwesterly to the brook known as "South Branch", thence southeasterly along said brook bounding land of Lella H. Devoy to a corner of said "Parcel 1", which corner is at the end of the fourth course described in said deed "thence northwesterly along said brook bounding Parcel 2 hereby conveyed

TOWN OF AUSTERLITZ
RECEIVED
MAR 2 3 2017
PLANNING BOARD
COLUMBIA COUNTY

SCHEDULE "A" (Continued)

and land of Leila H. Devoy to an old woven wire fence", thence northeasterly along the fifth course of "Parcel 1" conveyed herein to the end thereof; thence northwesterly along the sixth course of said "Parcel 1" to the point or place of BEGINNING;

ALSO, a right of way across that certain tract or parcel of land, in the Town of Austerlitz, Columbia County, New York, conveyed by Thomas S. Buckley and Julia A. Buckley, his wife, to Charles A. Briggs by deed dated January 13, 1902, recorded in Columbia County Clerk's Office in Deed Book 117, Page 75, which tract or parcel of land joins "Parcel 1" of two certain lots or tracts of land in said Town of Austerlitz conveyed by Lillie A. Reynolds to Walter Wilson and Fannie Wilson, his wife, as tenants by the entirety, by deed dated September 15, 1941, recorded in Deed Book 254, Page 306, said right of way being more particularly defined and described as follows: The right of way runs from the Town road between Red Rock and Spencertown (where it runs from northwest to southeast) at a 15 inch hickory tree at the intersection of an old stone fence along the southwesterly side of said town road and an old stone fence running southwesterly across the above mentioned land of Charles Briggs, to said "Parcel 1" conveyed by Lillian A. Reynolds to said Walter Wilson and Fannie Wilson, where said "Parcel 1" is bounded by the second course along an old barbed wire fence described in said deed to Walter Wilson and Fannie Wilson, said right of way following the course of said old stone fence running southwesterly from said 15 inch hickory tree and lying on the northwesterly side thereof and being 30 feet in width. Said 15 inch hickory tree is situated about 900 feet southeasterly from the point of beginning of the description of "Parcel 1" in said deed to Walter Wilson and Fannie Wilson. Said right of way is for ingress and egress between said town road and said land of Walter Wilson and Fannie Wilson, his wife, as tenants by the entirety, their, his or her heirs and assigns, in any manner and for any purpose, and may be improved by said Walter Wilson and Fannie Wilson, their, his or her heirs or assigns in such manner as shall be necessary or necessary for the purpose of said right of way.

EXCEPTING from the within described parcels, however, three parcels heretofore conveyed by the said Walter Wilson and Fannie Wilson as follows:
(1) to Donald MacCready dated October 22, 1941 and recorded October 29, 1941 in Deed Book 254 Page 578, (2) to Myra Smilow dated September 20, 1944 and recorded September 25, 1944 in Deed Book 266 Page 451, (3) to Myra Smilow dated June 8, 1945 and recorded August 27, 1945 in Deed Book 271, Page 1.

TOWN OF AUSTERLITZ
RECEIVED
MAR 2 3 2022
PLANNING BOARD
COLUMBIA COUNTY

SCHEDULE "A" (Continued)

ALSO, two rights of way across that certain tract or parcel of land in the Town of Austerlitz, Columbia County, New York, conveyed by Marie Briggs of the Town of Austerlitz, County of Columbia, State of New York, to Lawrence B. Dottenheim of Locust Street, Village of Chatham, County of Columbia, State of New York, by deed dated November 15, 1946 and recorded in the Columbia County Clerk's Office in Deed Book 280, Page 504, which tract or parcel of land now owned by the said Marie Briggs is described as follows:

The East by land of Mary Briggs bounded on the North by right of way on the land of the party of the first part leading easterly to the land of the party of the second part, bounded on the East by the land on the party of the second part; bounded on the South by stream running easterly on the property of the party of the first part into the property of the party of the second part.

FIRST RIGHT OF WAY

Right to lay under, upon or over the above described premises telephone, power and electric wires, conduits and poles and to maintain, operate, relay and remove said wire, conduits and poles.

SECOND RIGHT OF WAY

Right to construct and maintain, together with the free and uninterrupted use and enjoyment of a road ten feet wide on the above described premises beginning at a point sixty feet easterly, more or less, from the northeasterly corner of the above described premises; thence running southerly on the above described premises 550 feet, more or less, to a point fifty feet, more or less, east of the property of the party of the second part (so in deed to grantors); thence running westerly fifty feet, more or less, to the property of the party of the second part (so in deed to grantors).

It is understood and agreed by and between the parties hereto that said right of way is to connect the present right of way forming the northern boundary of the above described premises of the party of the first part (so in deed to grantors) with the road now being constructed on the land of the party of the second part (so in deed to grantors) and running along the northerly side of the continuation of the stream forming the southerly boundary of the premises of the party of the first part (so in deed to grantors) as aforesaid.

Together with all the rights and privileges incident and necessary to the enjoyment of these grants.

TOWN OF AUSTERLITZ
RECEIVED
MAR 2 3 2022
PLANNING BOARD
COLUMBIA COUNTY

SCHEDULE "A" (Continued)

PARCEL B:

ALSO, all that piece or parcel of land situate, lying and being in the Town of Austerlitz, Columbia County, New York, generally bounded and described as follows:

BEGINNING at a point marked by an iron pin denotes the northwesterly corner of the parcel herein described and on line of lands of Eric and Carolyn L. Scott; thence in a generally southerly direction along lands of Eric and Carolyn L. Scott, 536 feet, more or less, to the center of a stream and being the southwesterly corner of the parcel herein described; thence along the center of the stream, as it winds and turns, in a generally easterly direction of 68 feet, more or less to a point in the center of said stream and on line of lands of Charles A. and Helen A. Briggs, and being the southeasterly corner of the parcel herein described; thence in a generally northerly direction along lands of said Charles A. and Helen A. Briggs, a distance of 593 feet, more or less (said course being marked by iron pins) to a point again marked by an iron pin, and being the northeasterly corner of the parcel herein described; thence still along lands of Charles A. and Helen A. Briggs in a generally westerly direction 88 feet, more or less, to the point of **BEGINNING.**

PARCEL C:

ALL that piece or parcel of vacant land situate, lying and being in the Town of Austerlitz, Columbia County, New York, bounded and described as follows:

BEGINNING at a point situate in the center line of a town road known as Stonewall Road, which point marks the northeasterly corner of the parcel herein described and the southeasterly corner of lands now or formerly of Ruth M. Grayzel and described in Book 384 of Deeds at Page 380; proceeding thence along the center line of said Stonewall Road; South 20° 18' East, 435.41 feet to a point and South 17° 26' East 212.12 feet to a point; said point marks the southeasterly corner of the parcel herein described and the northeasterly corner of "Parcel 2" as shown on the hereinafter referenced survey map; proceeding thence South 83° 46' 30" West 25.0 feet to an iron pin set; proceeding thence along a stone wall, South 83° 46' 30" West, 259.60 feet to a point and South 84° 42' 50" West 159.91 feet to an iron pin set; proceeding thence North 19° 48' West, 29.36 feet to an iron pin set; proceeding thence South 80° 32' West, 88.00 feet to an iron pin recovered, said iron pin marks the southwesterly corner of the parcel herein described; proceeding thence along a wire fence North 5° 53' West 187.64 feet to a point; North 7° 02' 20" West, 84.78 feet to a point; North 4° 58' West 85.34 feet to a point in a 3' Maple with wire; North 11° 21' 10" East, 40.81 feet to a point, North 16° 25' East 63.36 feet to an iron pin set and North 43 °41'

TOWN OF AUSTERLITZ
RECEIVED
MAR 2 3 2022
PLANNING BOARD
COLUMBIA COUNTY

SCHEDULE "A" (Continued)

50" East, 91.24 feet to a railroad spike set at base of Maple; proceeding thence along a stone wall and wire fence North 64° 17' 40" East 103.72 feet to a point; North 67° 04' 50" East 164.18 feet to an iron pin set and North 67° 04' 50" East, 30.00 feet to the center line of Stonewall Road, the point or place of BEGINNING.

BEING shown and designated as "Parcel 1" on a certain survey map entitled "Proposed Subdivision Map Survey of Property of Charles A. Briggs, Jr. and Helen A. Briggs, Town of Austerlitz, Columbia County, New York" made by Raymond M. Lublanetsky, L.S. #48359, dated October 15, 1990, revised November 29, 1990.

Parcel A, Parcel B and Parcel C constitute the same premises described in a deed from James T. Foran and Nancy K. Foran to Melvin L. Adelman and Susan L. Hunsdon which deed is dated October 22, 1994 and was recorded in the Columbia County Clerk's office on October 31, 1994 in Liber 778 of Deeds at Page 255.

ALSO conveyed herein, ALL that certain tract or parcel of vacant land, situate, lying and being in the Town of Austerlitz, Columbia county, New York bounded and described as follows:

BEGINNING at a point marked by an iron pin situate in the southerly line of an unmaintained roadway known as Talmadge Turnpike, which point marks the northwesterly corner of the parcel herein described; proceeding thence South 89° 37' 40" East 1772.38 feet to a point situate in the center of a stream or creek known as South Branch Creek and which point marks the northeasterly corner of the parcel herein described and the northwesterly corner of lands now or formerly of Hillman; proceeding thence along the centerline of said South Branch Creek as the same winds and turns, the following courses and distances: South 13° 01' 10" East, 34.99 feet to a point: South 46° 09' 20" East, 79.28 feet to a point : South 56° 36' 50" East 47.50 feet to a point: South 11° 31' 55" East, 56.85 feet to a point; South 6° 09' 00" West, 75.46 feet to a point; South 3° 28' 00" West, 35.70 feet to a point; South 13° 10' 50" East, 57.17 feet to a point; South 0° 51' 00" East, 39.56 feet to a point; and South 61° 08' 50" East, 75.43 feet to a point which marks the southwesterly corner of said lands now or formerly Hillman; thence still along the centerline of said South Branch Creek and along a portion of the westerly boundary line of other lands of Adelman & Hunsdon the following courses and distances: South 46° 10' 50" East, 44.08 feet to a point; South 14° 06' 20" East, 19.39 feet to a point; South 17° 57' 15" West, 70.55 feet to a point: South 9° 23' 30" East, 38.41 feet to a point; South 25° 11' 50" East, 63.37 feet to a point; and South 1° 46' 10" East, 55.58 feet to a point which marks the southeasterly corner of the parcel herein described; proceeding thence along the division line between the lands herein described on the northeast and other lands of Adelman & Hunsdon on the southwest, which said division line is marked partially by the remains of a stone wall and partially by the remains of a wire fence, the following courses and distances: South 85° 44' 20" West, 25.0 feet to a

TOWN OF AUSTERLITZ
RECEIVED
MAR 2 3 2022
PLANNING BOARD
COLUMBIA COUNTY

SCHEDULE "A" (Continued)

point marked by an iron pin, South 85° 44' 20" West, 144.92 feet to a point; South 84° 41' 30" West, 324.65 feet to a point; North 74° 11' 10" West, 132.55 feet to a point;
North 55° 58' 50" West, 17.91 feet to a point; North 50° 15' 20" West, 46.84 feet to a point;
North 52° 45' 10" West, 107.55 feet to a point; North 52° 07' 50" West, 133.05 feet to a point;
North 73° 43' 00" West, 154.54 feet to a point; North 72° 07' 10" West, 96.50 feet to a point;
North 55° 57' 20" West, 209.85 feet to a point; North 67 ° 14' 00" West, 119.17 feet to a point;
North 55° 33' 50" West, 36.52 feet to a point; North 82° 20' 40" West, 33.71 feet to a point;
North 72° 48' 50" West 168.69 feet to a point; North 71° 56' 20" West, 82.21 feet to a point;
North 46° 30' 40" West, 166.14 feet to a point; North 43° 31' 50" West, 76.05 feet to a point;
North 49° 15' 50" West 137.23 feet to a point; North 51° 38' 30" West 65.99 feet to a point; and
North 43° 54' 20" West, 60.03 feet to the point or place of **BEGINNING.**

CONTAINING 25.41 acres and being shown and designated as "Parcel 3" on a certain survey map entitled "Subdivision Map, Survey map of Properties of George S. Lee and Susan F. Lee, Towns of Austerlitz and Canaan, Columbia County, New York" made by Raymond M. Lublantesky, N.Y.L.S. #48359, dated June 4, 1997, revised April 25, 1996, and last revised April 29, 1998.

BEING the same premises described in a deed from George S. Lee and Susan F. Lee to Susan Hunsdon and Melvin Adelman dated August 8, 1998 and recorded in the Columbia County Clerk's Office on August 24, 1998 in Crtg 319 of Land Records at Frame 56.

Intended to be the same premises as conveyed by deed to grantor herein recorded in Liber 422 Cp 863 & corrected by correction deed in Liber 802 Cp 478.

Said premises is more particularly bounded and described according to a certain certified survey prepared by Daniel J. Russell, LS dated March 12, 2015 as follows:

BEGINNING at a point in the center of Stonewall Road, approximately one quarter of a mile south of its intersection with Columbia County Route 24, said point is the southeasterly corner of lands now or formerly of John and Mary Grayzel and is the northeasterly corner of the herein described parcel, all as is shown on the below mentioned map; proceeding thence along the center of Stonewall Road S17°29'09"E, 213.76 feet, S18°26'13"E, 109.50 feet and

TOWN OF AUSTERLITZ
RECEIVED
MAR 2 3 2022
PLANNING BOARD
COLUMBIA COUNTY

SCHEDULE "A" (Continued)

S16°22'50"E, 325.11 feet; thence along lands now or formerly of Langer S86°17'24"W, 28.88 feet to an iron rod set on the westerly side of Stonewall Road; thence continuing along lands now or formerly of Langer and along the remains of a stone wall S86°17'24"W, 259.60 feet and S87°13'44"W, 159.91 feet to an iron pipe recovered; thence continuing along lands now or formerly of Langer S05°21'26"E, 170.23 feet to an iron pipe recovered, S12°50'56"E, 97.03 feet to an iron pipe recovered, S09°57'16"E, 100.19 feet to an iron pipe recovered, S01°03'26"E, 102.21 feet to an iron pipe recovered and S09°44'14"W, 93.98 feet to a point in the center of a brook; thence continuing along lands now or formerly of Langer and along the center of said brook N81°54'06"W, 3.79 feet
and N44°37' 26"W, 64.21 feet; thence continuing along lands now or formerly of Langer and along a wire fence S05°27'54"W, 77.03 feet, S04°13'08"W, 47.60 feet, S05°51'31"E, 48.73 feet, S13°01'13"E, 158.30 feet, S24°50'23"E, 24.46 feet to an iron pipe recovered, S59°07'54"W, 112.27 feet and S59°48'14"W, 87.46 feet to an iron pipe recovered; thence along lands now or formerly of Steinbrenner S80°53'57"W, 385.54 feet to an iron rod recovered in a stone wall corner; thence continuing along lands now or formerly of Steinbrenner and partly along a stone wall N74°52'38"W, 79.49 feet, N73°35'59"W, 77.80 feet, N71°16'14"W, 193.82 feet, N72°05'14"W, 354.14 feet to an iron rod recovered in a stone wall corner, N70°46'34"W, 104.87 feet, N80°54'04"W, 91.19 feet, N77°30'04"W, 167.35 feet, N73°15'34"W, 170.90 feet to an iron pipe recovered, S85°10'26"W, 17.65 feet, N69°11'04"W, 213.18 feet, N71°04'34"W, 344.14 feet, N68°19'04"W, 251.81 feet and N76°59'34"W, 62.72 feet to an iron rod recovered in an old woods road; thence continuing along lands now or formerly of Steinbrenner and generally along the center of said old woods road S47°59'26"W, 181.99 feet and S28°14'56"W, 118.33 feet to an iron pipe recovered; thence along lands now or formerly of Richard W. Howes and along a wire fence N48°36'14"W, 60.52 feet and N49°48'54"W, 168.76 feet to a stone wall corner; thence along lands now or formerly of John H., Jr., and Joseph T. Doyle and partly along a stone wall N33°41'55"E, 274.03 feet, N26°41'31"E, 141.74 feet, N37°18'13"E, 66.57 feet, N50°17'05"E, 222.64 feet, N27°26'23"E, 178.59 feet, N38°23'57"E, 77.99 feet, N45°11'11"E, 68.52 feet and N53°50'16"E, 36.33 feet to an iron rod recovered in a stone wall corner; thence along lands now or formerly of Gordon Brawn S87°06'46"E, 1749.93 feet to an iron rod recovered on the westerly side of South Branch Creek and S87°06'46"E, 22.45 feet to a point in the center of South Branch Creek; thence along lands now or formerly of Patrick Daley and Adriane W. Kufta and along the center of South Branch Creek S10°30'16"E, 34.99 feet, S43°38'26"E, 79.26 feet, S54°05'56"E, 47.50 feet, S09°01'01"E, 66.65 feet, S06°39'54"W, 75.46 feet, S05°58'54"W, 35.70 feet, S10°39'56"E, 57.17 feet, S01°39'54"W, 39.56 feet and S58°37'56"E, 75.43 feet; thence continuing along lands now or formerly of Patrick Daley and Adriane W. Kufta and leaving the center of South Branch Creek N58°45'35"E, 19.95 feet to a 48" Pine Tree and N58°45'35"E, 263.31 feet to an iron pipe recovered; thence continuing along lands now or formerly of Patrick Daley and Adriane W. Kufta and along a wire fence N03°22'06"W, 187.64 feet and N04°31'26"W, 74.29 feet to an iron pipe recovered; thence along lands now or formerly of Warren M. Cohen and Stephanie S. Pressman and along a wire fence N04°31'26"W, 10.49 feet, N02°27'06"W, 85.34 feet, N13°52'04"E, 40.81 feet and N18°55'54"E, 63.36 feet to an iron rod recovered; thence along lands now or formerly

TOWN OF AUSTERLITZ
RECEIVED
MAR 2 3 2022
PLANNING BOARD
COLUMBIA COUNTY

SCHEDULE "A" (Continued)

of John and Mary Grayzel and along a wire fence N48°12'44"E, 81.24 feet, N66°48'34"E, 103.72 feet, N69°35'44"E, 164.18 feet to an iron pipe recovered on the westerly side of Stonewall Road and N69°35'44"E, 31.02 feet to the point of BEGINNING.

Address: 607 Stonewall Road, Austerlitz

Town: Austerlitz

County: Columbia

TAX DESIGNATION: Section: 68. Block: 1 Lot: 4

TOWN OF AUSTERLITZ
RECEIVED
MAR 7 3 2077
PLANNING BOARD
COLUMBIA COUNTY

TOTAL:
6.072 ACRES

SITE

PARCEL-1
3.07 ACRES

PARCEL-2
3.00 ACRES

STONEWALL ROAD

LANDS OF
LINDA M. LANDER AND
STEVEN V. LANDER TRUST

LANDS OF
WARREN R. TONCH AND
STEPHANIE SACKS PRESSMAN

LANDS OF
PATRICK J. DALEY AND
KIMBERLY M. KUPITZ

LANDS OF
JOHN ARON GRUTZE AND
MARY A. GRUTZE

LEGEND

MAP	DENOTES MAP AND TOLMS
MPP	NEW PIPE FOUND
MRS	NEW REBAR SET
	IRON BOUNDARY
	STONE WALL
	UTILITY POLES AND OVERHEAD UTILITY
	WIRE FENCE
	WOOD FENCE
	CENTERLINE

TOWN OF AUSTERLITZ
RECEIVED
MAR 2 3 2022
PLANNING BOARD
COLUMBIA COUNTY

PROPOSED SUBDIVISION
PROPERTY OF

ERIC WEGERBAUER REVOCABLE TRUST AND
CAROLINE JACKSON REVOCABLE TRUST

TOWN OF AUSTERLITZ, COLUMBIA COUNTY, NEW YORK

TOWN OF AUSTERLITZ TOWNS INFORMATION

ZONE	MIN LOT SIZE	MIN LOT WIDTH	MAX HEIGHT BLDG	FRONT SETBACK	SIDE SETBACK	REAR SETBACK
RURAL RESIDENTIAL	3 ACRES	200 FEET	40 FEET	30 FEET	30 FEET	30 FEET

SURVEYOR BY:
R. SARDO LAND SURVEYING SERVICES, PLLC
135 GEORGE ROAD
GREENT, NEW YORK 12075
518-622-8640
RSardoPLS@aol.com
sardolandsurvey.com

SARDO LAND SURVEYING

REMAIN W. SARDO, PLS.

PROJECT: 22000
DATE: 3/1/2022
REVISED
DRAWN BY: RWS
FILE: 22000Latestplotting
TAX #: PORTION OF 6.072-1-4
ST. NO: 607 STONEWALL ROAD

DRAWING: SB-1

SHEET 1 OF 1

PL-2022-01

Austerlitz Holding Co., LLC

Minor Subdivision / Property Line Adjustment

Tiffeny Cantu

From: Max Zacker <[redacted]
Sent: Tuesday, April 26, 2022 4:58 PM
To: Tiffeny Cantu; catalano_jm[redacted]
Subject: Revised Subdivision Application - Austerlitz Holding Co, LLC
Attachments: Saltzman - Revised Subdivision Application.pdf; Saltzman - Revised Survey Map.pdf; Saltzman - Deed.pdf; Saltzman - Consent to Boundary Line Adjustment.pdf

Good afternoon. Attached for submission, please find my revised subdivision application along with the new survey map, deed to the property, and consent to boundary line adjustment. As Ms. Cantu is aware, I dropped off the maps at the Town Offices earlier today. I will be reviewing my file as well as the subdivision law on Thursday to make sure I didn't miss anything. In the meantime, please let me know if you have any questions, concerns or require anything further. Thank you for your assistance.

-Max

--
Max Zacker, Attorney-at-Law
277 Main Street
Catskill, NY 12414
Tel: (518) 514-8150
Fax: (518) 751-1770

Town of Austerlitz
Planning Board
Revised **Application for Subdivision Review**

Application Date: 01/06/22

Applicant: (Property Owner)

Name: Austerlitz Holding Co, LLC Email: mjs@pallaspartners.com

Street Address: 3609 Wynbrooke Circle Mailing Address:

City: Louisville State: KY Zip: 40241 Phone Number: (502) 500-3322

Representative: (If Any)

Name: Matthew Saltzman Email: msaltzman@strothman.com

Phone Number: (502) 500-3322

Surveyor or Engineer:

Name: Robert Ihlenburg

Phone Number: (518) 828-7406 License Number: 049374

Tax Map Number: 94.00-1-19.1

Property Location: (Brief Description of Location)
Intersection of Rigor HIll Road and Louden Road & Southeast of Taconic Parkway

Names of Abutting Property Owners:
James Renfro, Oliver Thiess-Heldon, Benjamin Eaton, T. Myers, F. Workman, TC Singh, L. Martin Flood & Derubertis RT, J. McDonald, L. Dominguez, E. Powers, E. Hawkins, Jeffrey Bellows

Easements or Restriction:
None except for utility/telephone

The undersigned hereby requests approval by the Planning Board of the above identified subdivision Plat.

Signature:

Title: Max Zacker, Attorney for Austerlitz Holding Co., LLC

Date: April 26, 2022

FOR OFFICE USE ONLY Project ID

SUBMISSION DATES and APPROVALS

Applic. Fees & Preliminary	Public Hearing	SEQRA Determination	Final Approval

TOWN OF AUSTERLITZ RECEIVED APR 27 2022 PLANNING BOARD COLUMBIA COUNTY

COPY

617.20
Appendix B
Short Environmental Assessment Form

Instructions for Completing

Part 1 - Project Information. The applicant or project sponsor is responsible for the completion of Part 1. Responses become part of the application for approval or funding, are subject to public review, and may be subject to further verification. Complete Part 1 based on information currently available. If additional research or investigation would be needed to fully respond to any item, please answer as thoroughly as possible based on current information.

Complete all items in Part 1. You may also provide any additional information which you believe will be needed by or useful to the lead agency; attach additional pages as necessary to supplement any item.

Part 1 - Project and Sponsor Information
Matthew Saltzman, as managing member of Austerlitz Holding Co, LLC, represented by Max Zacker, Attorney-at-Law

Name of Action or Project:
Austerlitz Holding Co., LLC Rigor Hill Road and Louden Road Subdivision

Project Location (describe, and attach a location map):
Intersection of Rigor Hill Road and Louden Road in the Town of Austerlitz and land southeast of Taconic Parkway off of Rigor Hill Road

Brief Description of Proposed Action:
Three-lot subdivision with boundary line adjustment. Subdivision of a 55.065-acre parcel into three new parcels, namely parcels A, B & C. New Parcel A is 20.257 acres and is already bound by state highway, local roads and existing property lines. New Parcel B is 25.527 acres and is mostly bound by existing property lines and local roads. New Parcel C is 3.365 acres and is approxmately half-bound by local roads and half-bound by proposed new property lines. All new parcels will be for rural single-family residence.

There will also be a boundary line adjustment of an 81.511-acre parcel southeast of the Taconic Parkway to be annexed by the property known as 365 Rigor Hill Road.

See annexed deed containing the above existing parcels, new survey map and consent to boundary line adjustment.

Name of Applicant or Sponsor:	Telephone: (518) 514-8150
Max Zacker, Attorney-at-Law	E-Mail: maxzackerlaw@gmail.com

Address:
277 Main Street

City/PO:	State:	Zip Code:
Catskill	NY	12414

	NO	YES
1. Does the proposed action only involve the legislative adoption of a plan, local law, ordinance, administrative rule, or regulation? If Yes, attach a narrative description of the intent of the proposed action and the environmental resources that may be affected in the municipality and proceed to Part 2. If no, continue to question 2.	☐	☑
2. Does the proposed action require a permit, approval or funding from any other governmental Agency? If Yes, list agency(s) name and permit or approval:	☑	☐

3.a. Total acreage of the site of the proposed action? 55.065 + 81.5 acres
b. Total acreage to be physically disturbed? 3.0 acres
c. Total acreage (project site and any contiguous properties) owned or controlled by the applicant or project sponsor? 55.065 + 81.5 acres

4. Check all land uses that occur on, adjoining and near the proposed action.
☐ Urban ☑ Rural (non-agriculture) ☐ Industrial ☐ Commercial ☐ Residential (suburban)
☐ Forest ☑ Agriculture ☐ Aquatic ☐ Other (specify): _____
☐ Parkland

TOWN OF AUSTERLITZ RECEIVED APR 27 2022 PLANNING BOARD COLUMBIA COUNTY

RESET

COPY

	NO	YES	N/A
5. Is the proposed action,			
a. A permitted use under the zoning regulations?	☐	☑	☐
b. Consistent with the adopted comprehensive plan?	☐	☑	☐
6. Is the proposed action consistent with the predominant character of the existing built or natural landscape?	NO ☐	YES ☑	
7. Is the site of the proposed action located in, or does it adjoin, a state listed Critical Environmental Area? If Yes, identify: _____	NO ☑	YES ☐	
8. a. Will the proposed action result in a substantial increase in traffic above present levels?	NO ☑	YES ☐	
b. Are public transportation service(s) available at or near the site of the proposed action?	☑	☐	
c. Are any pedestrian accommodations or bicycle routes available on or near site of the proposed action?	☑	☐	
9. Does the proposed action meet or exceed the state energy code requirements? If the proposed action will exceed requirements, describe design features and technologies: _____	NO ☑	YES ☐	
10. Will the proposed action connect to an existing public/private water supply? If No, describe method for providing potable water: Private well	NO ☑	YES ☐	
11. Will the proposed action connect to existing wastewater utilities? If No, describe method for providing wastewater treatment: Private septic	NO ☑	YES ☐	
12. a. Does the site contain a structure that is listed on either the State or National Register of Historic Places?	NO ☑	YES ☐	
b. Is the proposed action located in an archeological sensitive area?	☑	☐	
13. a. Does any portion of the site of the proposed action, or lands adjoining the proposed action, contain wetlands or other waterbodies regulated by a federal, state or local agency?	NO ☐	YES ☑	
b. Would the proposed action physically alter, or encroach into, any existing wetland or waterbody? If Yes, identify the wetland or waterbody and extent of alterations in square feet or acres: _____	☑	☐	
14. Identify the typical habitat types that occur on, or are likely to be found on the project site. Check all that apply: ☐ Shoreline ☑ Forest ☑ Agricultural/grasslands ☐ Early mid-successional ☑ Wetland ☐ Urban ☐ Suburban			
15. Does the site of the proposed action contain any species of animal, or associated habitats, listed by the State or Federal government as threatened or endangered?	NO ☑	YES ☐	
16. Is the project site located in the 100 year flood plain?	NO ☑	YES ☐	
17. Will the proposed action create storm water discharge, either from point or non-point sources? If Yes, a. Will storm water discharges flow to adjacent properties? ☐ NO ☐ YES	NO ☑	YES ☐	
b. Will storm water discharges be directed to established conveyance systems (runoff and storm drains)? If Yes, briefly describe: ☐ NO ☐ YES _____			

TOWN OF AUSTERLITZ RECEIVED APR 27 2022 PLANNING BOARD COLUMBIA COUNTY

RESET

COPY

	NO	YES
18. Does the proposed action include construction or other activities that result in the impoundment of water or other liquids (e.g. retention pond, waste lagoon, dam)? If Yes, explain purpose and size:	✔	
19. Has the site of the proposed action or an adjoining property been the location of an active or closed solid waste management facility? If Yes, describe:	✔	
20. Has the site of the proposed action or an adjoining property been the subject of remediation (ongoing or completed) for hazardous waste? If Yes, describe:	✔	

I AFFIRM THAT THE INFORMATION PROVIDED ABOVE IS TRUE AND ACCURATE TO THE BEST OF MY KNOWLEDGE

Applicant/sponsor name: Max Zacker, Attorney-at-Law Date: April 26, 2022

Signature:

Part 2 - Impact Assessment. The Lead Agency is responsible for the completion of Part 2. Answer all of the following questions in Part 2 using the information contained in Part 1 and other materials submitted by the project sponsor or otherwise available to the reviewer. When answering the questions the reviewer should be guided by the concept "Have my responses been reasonable considering the scale and context of the proposed action?"

	No, or small impact may occur	Moderate to large impact may occur
1. Will the proposed action create a material conflict with an adopted land use plan or zoning regulations?		
2. Will the proposed action result in a change in the use or intensity of use of land?		
3. Will the proposed action impair the character or quality of the existing community?		
4. Will the proposed action have an impact on the environmental characteristics that caused the establishment of a Critical Environmental Area (CEA)?		
5. Will the proposed action result in an adverse change in the existing level of traffic or affect existing infrastructure for mass transit, biking or walkway?		
6. Will the proposed action cause an increase in the use of energy and it fails to incorporate reasonably available energy conservation or renewable energy opportunities?		
7. Will the proposed action impact existing: a. public / private water supplies?		
b. public / private wastewater treatment utilities?		
8. Will the proposed action impair the character or quality of important historic, archaeological, architectural or aesthetic resources?		
9. Will the proposed action result in an adverse change to natural resources (e.g., wetlands, waterbodies, groundwater, air quality, flora and fauna)?		

TOWN OF AUSTERLITZ
RECEIVED
APR 27 2022
PLANNING BOARD
COLUMBIA COUNTY

RESET

COPY

	No, or small impact may occur	Moderate to large impact may occur
10. Will the proposed action result in an increase in the potential for erosion, flooding or drainage problems?	☐	☐
11. Will the proposed action create a hazard to environmental resources or human health?	☐	☐

Part 3 - Determination of significance. The Lead Agency is responsible for the completion of Part 3. For every question in Part 2 that was answered "moderate to large impact may occur", or if there is a need to explain why a particular element of the proposed action may or will not result in a significant adverse environmental impact, please complete Part 3. Part 3 should, in sufficient detail, identify the impact, including any measures or design elements that have been included by the project sponsor to avoid or reduce impacts. Part 3 should also explain how the lead agency determined that the impact may or will not be significant. Each potential impact should be assessed considering its setting, probability of occurring, duration, irreversibility, geographic scope and magnitude. Also consider the potential for short-term, long-term and cumulative impacts.

☐ Check this box if you have determined, based on the information and analysis above, and any supporting documentation, that the proposed action may result in one or more potentially large or significant adverse impacts and an environmental impact statement is required.

☐ Check this box if you have determined, based on the information and analysis above, and any supporting documentation, that the proposed action will not result in any significant adverse environmental impacts.

Name of Lead Agency	Date
Print or Type Name of Responsible Officer in Lead Agency	Title of Responsible Officer
Signature of Responsible Officer in Lead Agency	Signature of Preparer (if different from Responsible Officer)

TOWN OF AUSTERLITZ
RECEIVED
APR 27 2022
PLANNING BOARD
COLUMBIA COUNTY

PRINT

RESET

COPY

BARGAIN AND SALE DEED
WITH COVENANT AGAINST GRANTOR'S ACTS
(Tax Lot 94.-1-19.1)

THIS INDENTURE, made as of April 27, 2021, **BETWEEN**

B. HIVE PARTNERS LLC, a Delaware limited liability company an address at 3630 Gardens Parkway, Palm Beach Gardens, FL 33410,
party of the first part, and

AUSTERLITZ HOLDING CO, LLC, a New York limited liability company, having an address at c/o Larry H. Machiz, Esq., 240 Tice Hill Road, Ghent, NY 12075,
party of the second part,

WITNESSETH, that the party of the first part, in consideration of ten dollars and other valuable consideration paid by the party of the second part, does hereby grant and release unto the party of the second part, the heirs or successors and assigns of the party of the second part forever,

ALL that certain plot, piece or parcel of land, with the buildings and improvements thereon erected, which are described in Schedule A annexed hereto and made a part hereof.

BEING THE SAME PREMISES conveyed to B. Hive Partners, LLC by deed from Washington Mutual Bank, FA, successor to Home Savings of America, FSB dated April 14, 1999 recorded in the Columbia County Clerk's Office on April 21, 1999 in Cartridge 335 Frame 850, EXCEPTING AND RESERVING THEREFROM, the parcel conveyed by B. Hive Partners LLC to Benjamin Eaton and Mary Ellen Drumm, by deed dated February 9, 2009 and recorded on March 2, 2009 in Book 653 of Official Records Page 563 and depicted on filed Map No. 09-07.

TOGETHER with all right, title and interest, if any, of the party of the first part, in and to any streets and roads abutting the above-described premises to the center lines thereof; TOGETHER with the appurtenances and all the estate and rights of the party of the first part in and to said premises; TO HAVE AND TO HOLD the premises herein granted unto the party of the second part, the heirs or successors and assigns of the party of the second part forever.

AND the party of the first part covenants that the party of the first part has not done or suffered anything whereby the said premises have been encumbered in any way whatever, except as aforesaid.

AND the party of the first part, in compliance with Section 13 of the Lien Law, covenants that the party of the first part will receive the consideration for this conveyance and will hold the right to receive such consideration as a trust fund to be applied first for the purpose of paying the cost of the improvement and will apply the same first to the payment of the cost of the improvement before using any part of the total of the same for any other purpose.

TOWN OF AUSTERLITZ
RECEIVED
APR 27 2022
PLANNING BOARD
COLUMBIA COUNTY

COPY

The word "party" shall be construed as if it read "parties" whenever the sense of this indenture so requires.

IN WITNESS WHEREOF, the party of the first part has duly executed this deed the day and year first above written.

B. HIVE PARTNERS LLC

By: _____
William H. Saltzman,
Manager

STATE OF FLORIDA }
}ss.:
COUNTY OF PALM BEACH }

On April 27, 2021 before me the undersigned, a notary public of the State of **Florida** personally appeared **William H. Saltzman** personally to me known or proved to me on the basis of satisfactory evidence to be the individual whose name is subscribed to the within instrument and acknowledged to me that he executed the same in his capacity, and that by his signature on the instrument, the individual, or the person upon behalf of which the individuals acted, executed the instrument.

Janette Miller
Notary Public

Notary Public State of Florida
Janette Miller
My Commission HH 061563
Expires 11/27/2024

County Tax Map Identifier: 94.-1-19.1

RECORD AND RETURN TO:

Larry H. Machiz, Esq.
240 Tice Hill Road
Ghent. NY 12075

TOWN OF AUSTERLITZ
RECEIVED
APR 27 2022
PLANNING BOARD
COLUMBIA COUNTY

COPY

C.1. Deed 3.2

WK

SCHEDULE A

Legal Description

TAX MAP PARCEL 94.-1-19.1:

PARCEL A – ALL that piece or parcel of land with buildings and improvements thereon, situate in the Town of Austerlitz and a small portion in the Town of Ghent is bounded and described as follows: BEGINNING at a point in the center line of Rigor Hill Road, a town road, said point being on the property of lands of Joseph & Barbara Iuviene on the southwest and the herein described parcel on the southeast. Thence along the center line of Rigor Hill Road S 44-28-35E 82.0 feet, S42-39-11E 93.75 feet, on a curve to the right and tangent to the previous course having a radius of 435.0 feet for a length of 222.19 feet, S 13-23-14E 129.75 feet and S16-45-02E 93.46 feet. Thence along lands of Anne B. Macheski N49-10-17E 21.0 feet to an iron pipe found, N49-10-17E partly along a stone wall 280.89 feet to an iron pipe found and S57-38-54E 280.74 feet to an iron pipe found. Thence along lands of Randall M. & Christine Hohn and along a wire fence S61-09-59E 113.40 feet to a 20" maple, S58-53-17E 140.45 feet, S62-15-39E 153.25 feet to a 24" wild cherry and S53-38-57E 62.60 feet to a point, said point bears S88-43-16E from and 1.45 feet distant from a concrete monument found. Thence along lands of the State of New York being the Taconic State Parkway S18-39-57W 60.58 feet to an iron rod set, S18-39-57W crossing Rigor Hill Road 50.0 feet to an iron rod set, S18-39-57W 103.26 feet, S26-43-28W 357.54 feet to a concrete monument found, S37-23-33W 453.98 feet to a concrete monument found, S46-43-39W 913.89 feet to a concrete monument found and S57-33-02W 300.95 feet to an iron rod set in a stone wall, said iron rod set bears N57-33-02E from and 32.96 feet distant from a concrete monument found. Thence along lands of Alexander Bruce & Hildegarde E. Louden and along a stone wall N16-08-54E 64.82 feet, N17-05-53E 219.28 feet, N16-14-14E 376.23 feet, N17-31-30E 107.96 feet, N18-35-26E now along a wire fence 148.97 feet, N04-29-38E 48.32 feet, N09-43-22W 85.72 feet, N17-07-35W 129.66 feet to an iron rod set and N17-07-35W 37.46 feet to the center line of Louden Road, a town road. Thence along the centerline of Louden Road S64-57-12W 206.80 feet and S66-51-03W 271.22 feet. Thence along lands of Warren F. Hastings, et al N20-15-33W 26.0 feet to an iron pipe found, N20-15-33W 492.57 feet to an iron pipe found and S 68-24-34W 151.16 feet to an iron pipe found in a stone wall. Thence along lands of Alexander Bruce & Hildegarde E. Louden and along a stone wall N20-04-02W 523.32 feet, N42-10-04W 22.34 feet to a point on the reputed Austerlitz/Ghent town line, N42-10-04W now in the Town of Ghent 41.76 feet to the end of the stone wall and N39-18-29W 125.18 feet to an iron pipe found. Thence along lands of James G. Renira N37-15-49E 131.20 feet, N60-17-07E now along a stone wall 156.90 feet to an iron rod recovered on the reputed Austerlitz/Ghent town line. Thence along lands of Joseph & Barbara Iuviene and along a stone wall N60-17-07E now in the Town of Austerlitz 270.70 feet to an iron rod recovered, S31-46-13E 600.60 feet to an iron rod recovered, N29-56-38E 77.90 feet, N33-10-52E 149.96 feet, N34-34-30E 78.64 feet, N30-33-08E 119.73 feet, N32-34-36E 161.56 feet, N39-29-50E 49.54 feet to an iron pipe found and N39-29-50E 17.0 feet to the point of beginning.

FOR INFORMATION ONLY, NOT INSURED: Containing 55.065 acres of land.

EXCEPTING AND RESERVING FROM PARCEL A the parcel conveyed by B. Hive Partners LLC to Benjamin Eaton and Mary Ellen Drumm by deed dated 2/9/2009 recorded 3/2/2009 in Book 653 of Official Records Page 563 and depicted on filed Map No. 09-07.

PARCEL B – ALL that piece or parcel of vacant land situate in the Town of Austerlitz, County of Columbia, State of New York is described as follows: BEGINNING at the base of a fallen broken concrete monument found on the easterly boundary of lands of the State of New York being the Taconic State Parkway and southerly of Rigor Hill Road, said monument being at the southwesterly corner of lands of Mid Valley Oil Company and being the northerly most point on the herein described parcel. Said monument also bears S61-13-32E from and 508.87 feet distance from the northeasterly corner of Parcel A, above described. Thence

TOWN OF AUSTERLITZ
RECEIVED
APR 27 2022
PLANNING BOARD
COLUMBIA COUNTY

COPY

lmb

along lands of Mid Valley Oil Company S50-57-55E 250.0 feet to an iron rod found. Thence along lands of Gerard Polodino S50-57-55E 322.30 feet to an iron rod set in the center line of an old abandoned town road (formerly known as Wagner Road), said iron rod set bears N50-57-55W from and 16.06 feet distant from a bathay monument found. Thence along lands of Donald F. & Marion W. Kern and along the center line of the old abandoned road S12-44-43W 259.87 feet, S18-42-25W 324.83 feet, S20-05-36W 212.53 feet, on a curve to the left and tangent to the previous course having a radius of 320.0 feet for a length of 290.18 feet, S 31-51-58E 40.10 feet, on a curve to the right and tangent to the previous course having a radius of 77.86 feet for a length of 99.27 feet, S41-11-02W 163.94 feet, S23-29-02W 234.96 feet, S33-32-22W 169.75 feet, S17-32-02W 70.43 feet, on a curve to the right and tangent to the previous course having a radius of 330.0 feet for a length of 200.57 feet, S52-21-36W 73.71 feet, S65-08-02W 59.09 feet, S23-43-27W 211.21 feet and S29-24-02W 67.73 feet to a point, said point bears N66-34-20W from and 12.0 feet distant from an iron rod found in a stone wall along the southerly boundary of Kern. Thence along lands of Thomas J. Scarano and continuing along the center line of the old abandoned road S42-42-43 W 88.61, S25-35-02W 79.85 feet and S13-30-02W 52.70 feet. Thence leaving said road and continuing along lands of Scarano S54-36-51W 511.83 feet, S58-05-02W along a stone wall 99.60 feet, S79-54-02W 106.29 feet and N87-38-11W 62.61 feet to an iron rod found. Thence along lands of Manuel Durarte and along a stone wall N76-00-14W 133.43 feet, N63-58-22W 166.37 feet, N60-03-34W 105.49 feet and N62-51-08W 146.94 feet to an iron pipe found. Thence along lands of Elliott R. & Janice N. Sharron partly along a stone wall and partly along a wire fence N36-59-43W 105.76 feet, N29-56-35W 64.0 feet, N13-54-16W 100.90 feet, N26-54-10W 69.65 feet, N19-19-27W 55.96 feet to a 15" maple, N26-57-55W 165.90 feet, to the base of an iron pipe found, N15-18-07W 77.70 feet to a stump with wire, N06-24-15W 74.95 feet, N02-15-56E 130.33 feet and N04-15-35E 156.83 feet to a concrete monument found, said concrete monument found bears S07-45-22W from an 529.19 feet distant from an iron rod set at the southerly most corner of Parcel A, above described thence along lands of the State of New York being the Taconic State Parkway N60-51-11E 404.31 feet to a concrete monument found, N51-23-32E 632.79 feet to a concrete monument found, N50-06-27E 621.38 feet to a concrete monument found, N38-10-13E 549.96 feet to a concrete monument found, and N27-45-28E 595.84 feet to the point of beginning.

FOR INFORMATION ONLY, NOT INSURED: Containing 81.511 acres of land.

ALL as shown on a survey map entitled "PROPERTY OF WASHINGTON MUTUAL BANK, F.A. TO BE CONVEYED TO B. HIVE PARTNERS, LLC" dated March 9, 1999 by James Tomaso, N.Y.S. Lic. No. 049826 L.S.

TOWN OF AUSTERLITZ
RECEIVED
APR 27 2022
PLANNING BOARD
COLUMBIA COUNTY

C.1. Deed 3.2

COPY

bms

THIS CONSENT TO BOUNDARY LINE ADJUSTMENT is made this 21st day of April, 2022 by Dominic Ammerman, as managing member of 365 Rigor Hill Road, LLC.

WHEREAS, 365 Rigor Road, LLC is the current owner of certain real property in located in the Town of Austerlitz, New York commonly referred to as 365 Rigor Hill Road, Austerlitz, New York and bearing tax ID number 91.-1-22.1, and Dominic Ammerman is the managing member of 365 Rigor Hill Road, LLC; and

WHEREAS, Austerlitz Holding Co., LLC is the current owner of other real property in the Town of Austerlitz that abuts the aforementioned real property owned by 365 Rigor Hill Road, LLC, and that property bears Tax ID number 94.00-1-19.1 and consists of approximately 81.511 acres; and

WHEREAS, 365 Rigor Hill Road, LLC intends on purchasing the aforementioned 81.511-acre lot owned by Austerlitz Holding Co., LLC that abuts its property; and

WHEREAS, the aforementioned 81.511-acre lot is "landlocked" meaning it does not have the minimum 75-foot frontage on an appropriate road or highway to legally exist on its own; and

WHEREAS, the aforementioned 81.511-acre lot owned by Austerlitz Holding Co., LLC appears on the same deed and shares the same tax ID number as other parcels that are not subject to the purchase or boundary line adjustment referenced herein; and

WHEREAS, a consent to boundary line adjustment appears to be necessary in order to create a legally conveyable lot pursuant to local authorities and other law; and

WHEREAS, a sketch plan of the boundary line adjustment consented to herein is annexed hereto; and

WHEREAS, Max Zacker, attorney for Matthew Saltzman, as managing member of Austerlitz Holding Co., LLC has permission to make application for the boundary line adjustment as described herein.

NOW THEREFORE, IT IS HEREBY CONSENTED by Dominic Ammerman, as managing member of 365 Rigor Hill Road, LLC that the aforementioned 81.511-acre parcel currently owned by Austerlitz Holding Co., LLC and bearing tax ID 94.00-1-19.1 **BE ANNEXED** to the parcel owned by 365 Rigor Hill Road bearing tax ID number 94.-1-22.1 and commonly referred to as 365 Rigor Hill Road, LLC.

Dated:

Dominic Ammerman

by Dominic Ammerman, as managing member of 365 Rigor Hill Road, LLC

TOWN OF AUSTERLITZ
RECEIVED
APR 27 2022
PLANNING BOARD
COLUMBIA COUNTY

COPY

ACKNOWLEDGMENT

STATE OF NEW YORK)

);ss:

COUNTY OF Nassau)

On the 21st day of April, in the year 2022 before me, the undersigned, a Notary Public in and for said State, personally appeared **Dominic Ammerman** personally known to me or proved to me on the basis of satisfactory evidence to be the individual whose name is subscribed to the within instrument and acknowledged to me that he executed the same in his capacity, and that by signature on the instrument, the individual, or the person upon behalf of which the individual acted, executed the instrument.

NOTARY PUBLIC

JORGO CELO
Notary Public - State of New York
NO. 01CE6424248
Qualified in Queens County
My Commission Expires Oct 25, 2025

TOWN OF AUSTERLITZ
RECEIVED
APR 27 2022
PLANNING BOARD
COLUMBIA COUNTY

COPY

COPY

NOTES:
1) This map was prepared from an accurate field survey. The property lines shown are established from deeds of record and existing monumentation as indicated.

2) This property is subject to easements and rights of way of record. Where a property line runs along the center of a highway the presumption is that the center of the pavement is the center of the road right of way. Where the property line does not reach the road center line any interest in and to the road center is intended to be conveyed (if any). Not all property adjoiners are indicated.

3) Sub-surface structures not visible or readily apparent are not shown and their location and extent are not certified.

4) Where fence lines and/or stone wall lines shown do not correspond with the property line the ownership boundary may not coincide with the property line.

5) All bearings have been rounded to the nearest 5 seconds of arc. Any variation from the title bearing is insignificant in its variation and/or its ground location.

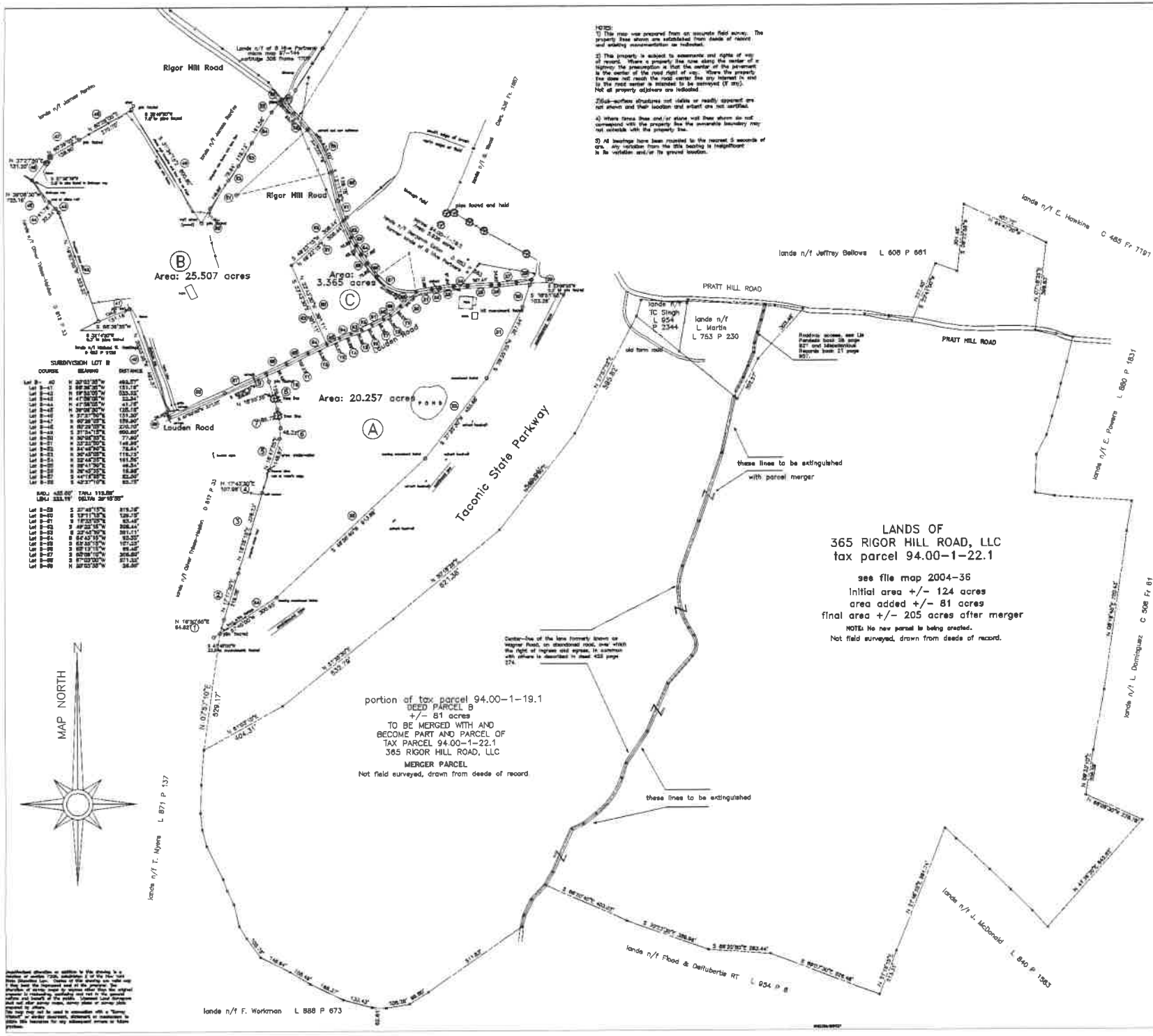

SUBDIVISION LOT A

COURSE	BEARING	DISTANCE
Lot A- 1	N 18°30'30"E	64.82'
Lot A-2	N 17°17'30"E	379.26'
Lot A-3	N 18°26'15"E	372.26'
Lot A-4	N 17°43'30"E	167.46'
Lot A-5	S 18°47'30"E	146.47'
Lot A-6	S 04°41'30"E	48.32'
Lot A-7	N 84°31'30"E	88.32'
Lot A-8	N 18°55'30"W	139.68'
Lot A-9	N 48°30'30"E	37.46'
Lot A-10	N 82°13'15"E	89.46'
Lot A-11	S 62°30'15"E	107.32'
Lot A-12	S 64°47'15"E	88.88'
Lot A-13	S 69°39'15"E	83.31'
Lot A-14	S 62°24'15"E	88.84'
Lot A-15	N 70°05'15"E	88.38'
Lot A-16	S 52°37'45"E	89.38'
Lot A-17	S 52°23'15"E	88.57'
Lot A-18	S 30°00'15"E	35.82'
Lot A-19	S 80°12'30"E	63.97'
Lot A-20	S 47°12'30"E	54.16'
Lot A-21	S 60°14'30"E	72.98'
Lot A-22	S 61°31'30"E	88.88'
Lot A-23	S 62°52'45"E	81.84'
Lot A-24	S 58°31'30"E	83.37'
Lot A-25	S 47°37'45"E	107.41'
Lot A-26	S 69°30'30"E	34.88'
Lot A-27	S 82°15'30"E	79.13'
Lot A-28	S 80°40'30"E	88.88'
Lot A-29	S 18°51'30"W	28.00'
Lot A-30	S 19°51'30"W	103.38'
Lot A-31	S 39°00'30"W	301.14'
Lot A-32	S 37°30'30"W	453.88'
Lot A-33	S 46°50'45"W	913.88'
Lot A-34	S 67°45'30"W	303.88'

SUBDIVISION LOT C

COURSE	BEARING	DISTANCE
Lot C- 80	N 32°43'30"W	391.11'
Lot C-81	N 48°22'15"E	308.44'
Lot C-82	S 24°50'30"E	84.12'
Lot C-83	S 38°22'30"E	43.88'
Lot C-84	S 88°30'30"E	45.73'
Lot C-85	S 22°01'30"E	47.88'
Lot C-86	S 32°50'30"E	72.88'

RADJ 180.00' TANJ 113.09'
LENJ 203.92' DELTA 64°52'20"

COURSE	BEARING	DISTANCE
Lot C-87	S 67°51'15"E	180.30'
Lot C-88	S 47°52'30"E	94.11'
Lot C-89	S 56°13'30"E	88.81'
Lot C-90	S 58°00'15"E	88.82'
Lot C-91	S 63°31'15"E	88.73'
Lot C-92	S 82°31'45"E	88.38'
Lot C-93	S 82°31'45"E	88.38'
Lot C-94	S 72°06'30"E	88.88'
Lot C-95	S 66°30'30"E	88.88'
Lot C-96	S 67°29'45"E	63.37'

SUBDIVISION LOT B

COURSE	BEARING	DISTANCE
Lot B- 40	N 32°03'30"W	483.37'
Lot B-41	S 88°30'30"W	131.18'
Lot B-42	N 88°30'30"W	333.32'
Lot B-43	N 47°38'30"W	33.54'
Lot B-44	N 47°38'30"W	43.18'
Lot B-45	N 88°30'30"W	135.18'
Lot B-46	N 37°31'15"W	133.30'
Lot B-47	N 37°31'15"W	133.30'
Lot B-48	N 37°31'15"W	133.30'
Lot B-49	N 82°31'15"E	220.10'
Lot B-50	S 37°54'15"E	600.60'
Lot B-51	N 30°00'30"E	77.60'
Lot B-52	N 33°33'30"E	148.88'
Lot B-53	N 54°49'30"E	78.84'
Lot B-54	N 30°43'30"E	118.13'
Lot B-55	N 30°43'30"E	101.30'
Lot B-56	N 30°41'30"E	88.34'
Lot B-57	N 30°43'30"E	88.88'
Lot B-58	N 30°43'30"E	88.88'
Lot B-59	N 42°31'15"E	83.37'

RADJ 435.00' TANJ 113.88'
LENJ 233.19' DELTA 28°15'55"

COURSE	BEARING	DISTANCE
Lot B-60	S 37°45'15"E	219.28'
Lot B-61	S 12°11'15"E	128.73'
Lot B-62	S 18°33'30"E	83.48'
Lot B-63	S 49°22'15"E	898.44'
Lot B-64	S 32°43'30"E	301.11'
Lot B-65	S 64°43'15"E	83.33'
Lot B-66	S 62°32'15"E	107.33'
Lot B-67	S 62°13'15"E	88.48'
Lot B-68	S 62°08'15"E	209.88'
Lot B-69	S 67°03'30"E	271.33'
Lot B-70	N 88°03'30"E	38.88'

added merger Parcel B April 21, 2022
added Austerlitz Holding Co., LLC subdivision December 1, 2021
added B title field work November 3, 2021
set pins along Restricted Areas September 27, 2007
revised Restricted Area A August 27, 2007
revised Restricted Area 142'15" 2007
added Restricted Areas February 28, 2007
added subdivision February 09, 2006

Rev. No.			

SUBDIVISION AND MERGER MAP
PREPARED FOR:

AUSTERLITZ HOLDING CO., LLC

TOWN OF AUSTERLITZ
COUNTY OF COLUMBIA
STATE OF NEW YORK

tax parcel 94.00-1-19.1
reference deed 938 frame 1729
Zone: Rural Residential District

SURVEY INFORMATION BY:
ROBERT J. IHLENBURG, LAND SURVEYOR
137 SHARPTOWN ROAD
STUYVESANT, NEW YORK 12173
(518) 828-7406 rjihlenburg@gmail.com
NYS PLS 049374

© 2022

DATE	SCALE:	MAP No.	SHEET

Tiffeny Cantu

From: Max Zacker [redacted]
Sent: Wednesday, April 27, 2022 9:30 AM
To: Tiffeny Cantu; catalano_jm[redacted]
Subject: Re: Revised Subdivision Application - Austerlitz Holding Co, LLC
Attachments: Saltzman - 365 Rigor Hill Road, LLC Deed.pdf

Good morning, I am also attaching the deed for the property of 365 Rigor Hill Road, LLC that will annex the parcel southeast of the Taconic Parkway to be included with this application. As I have stated several times previously, this is somewhat new territory for me, so I would be grateful to be advised if there is anything else I should include with this application prior to the close of business tomorrow. Thank you!

-Max

On Tue, Apr 26, 2022 at 4:58 PM Max Zacker [redacted] wrote:

Good afternoon. Attached for submission, please find my revised subdivision application along with the new survey map, deed to the property, and consent to boundary line adjustment. As Ms. Cantu is aware, I dropped off the maps at the Town Offices earlier today. I will be reviewing my file as well as the subdivision law on Thursday to make sure I didn't miss anything. In the meantime, please let me know if you have any questions, concerns or require anything further. Thank you for your assistance.

-Max

--
Max Zacker, Attorney-at-Law
277 Main Street
Catskill, NY 12414
Tel: (518) 514-8150
Fax: (518) 751-1770

--
Max Zacker, Attorney-at-Law
277 Main Street
Catskill, NY 12414
Tel: (518) 514-8150
Fax: (518) 751-1770

HOLLY C. TANNER
COLUMBIA COUNTY CLERK
560 WARREN ST., HUDSON, N.Y. 12534
(518) 828-3339

COVER SHEET REV 03-03-05

COLUMBIA COUNTY

County Clerk's Recording Page

Return To:

BALDWIN & BLOOMSTEIN
ATTORNEYS AT LAW
PO BOX 248
HILLSDALE NY 12529

Grantor:
11 11 40TH AVENUE ASSOC LLC

Grantee:
365 RIGOR HILL ROAD LLC

Book: **560** Page: **790**
Page Count: **4**
Doc Type: **DEED (RES)**
Rec Date: **12/01/2005**
Rec Time: **01:48:46 PM**
Control #: **2005019031**
User ID: **cash1**
Trans Num: **133296**

DEED SEQ: **00000514**
MTG SEQ
UCC
SCAR
INDEX

Recording Fees:

RECORDING	$17.00
ED/ CULTURAL FUND	$1.00
TRANSFER	$0.00
TAX 6	$0.00
ED FUND CULTURE INDEX	$14.25
ED FUND INDEX	$4.75
RP- 5217 (Res)	$66.00
RP-5217 (Rec Fee)	$9.00
	$5.00
TP 584	
	5.00
Total:	**$117.00**

Consideration Amount:	**$0.00**
Basic	**$0.00**
MTG DOC	**$0.00**
Columbia Co	**$0.00**
Sonyma	**$0.00**
TRANSFER	**$0.00**
TAX 6	**$0.00**

STATE OF NEW YORK
COLUMBIA COUNTY

WARNING: DO NOT DETACH!!
THIS SHEET CONSTITUTES THE CLERKS ENDORSEMENT REQUIRED BY SECTION 316 - A(5) & SECTION 319 OF THE REAL PROPERTY LAW OF THE STATE OF NY.

HOLLY C TANNER
COUNTY CLERK

RECEIVED
APR 27 2022
PLANNING BOARD COLUMBIA COUNTY

Holly C. Tanner

◆◆THIS IS NOT A BILL◆◆

COPY

2

Standard N.Y.B.T.U Form 8007-10M - Bargain and Sale Deed, with Covenant against Grantor's Acts - Individual or Corporation

CONSULT YOUR LAWYER BEFORE SIGNING THIS INSTRUMENT - THIS INSTRUMENT SHOULD BE USED BY LAWYERS ONLY

****

THIS INDENTURE, made the 26th day of OCTOBER, 2005;

BETWEEN

11-11 40TH AVENUE ASSOC., LLC
C/O Peter Neofytides
36-31 10th Street
Long Island City, NY 11106

party of the first part, and

365 RIGOR HILL ROAD, LLC
C/O Peter Neofytides
365 Rigor Hill Road
Austerlitz, New York 12017

party of the second part,

WITNESSETH, that the party of the first part, in consideration of: **TEN AND NO/100 ($10.00) ==========DOLLARS**, lawful money of the United States, and other good and valuable considerations paid by the party of the second part, does hereby grant and release unto the party of the second part, the heirs or successors and assigns of the party of the second part forever,

All that certain plot, piece or parcel of land, consisting of 124.097 acres, together with the buildings and improvements thereon erected, situate, lying and being in the Town of Austerlitz, County of Columbia and State of New York, and shown as PARCEL 1 on Filed Map No. 2004-36; and all that 6.474 acre lot shown as PARCEL 2 on said filed map 2004-36.

TOGETHER WITH and SUBJECT TO all easements, restrictions, and conditions of record, and the notes on filed Map 2004-36, and **TOGETHER WITH** and **SUBJECT TO** the right of ingress and egress in common with others over existing lane f/k/a as Wagner Road.

Being the same premises conveyed to 11-11 40th AVENUE ASSOC., LLC, by Deed from Dona Whiteman and Roger Kern, Co-Executors and distributees of the Estate of Marion W. Kern, deceased, and Nancy J. Kern and Janice Warner, the remaining distributees of the Estate of Marion W. Kern, deceased, dated December 29, 2004, and recorded in the Columbia County Clerk's Office on January 7, 2005, in Cartridge 525 at Frame 2463.

TOWN OF AUSTERLITZ
RECEIVED
APR 2 7 2022
PLANNING BOARD
COLUMBIA COUNTY

COPY

3

TOGETHER with all right, title and interest, if any, of the party of the first part in and to any streets and roads abutting the above described premises to the center line thereof;

TOGETHER with the appurtenances and all the estate and rights of the party of the first part in and to said premises;

TO HAVE AND TO HOLD the premises herein granted unto the party of the second part, the heirs or successors and assigns of the party of the second part forever.

AND the party of the first part covenants that the party of the first part has not done or suffered anything whereby the said premises have been encumbered in any way whatever, except as aforesaid.

AND the party of the first part, in compliance with Section 13 of the Lien Law, covenants that the party of the first part will receive the consideration for this conveyance and will hold the right to receive such consideration as a trust fund to be applied first for the purpose of paying the cost of the improvement and will apply the same first to the payment of the cost of the improvement before using any part of the total of the same for any other purpose.

The word "party" shall be construed as if it read "parties" whenever the sense of this indenture so requires.

IN WITNESS WHEREOF, the party of the first part has duly executed this deed the day and year first above written.

IN PRESENCE OF

11-11 40TH AVENUE ASSOC., LLC,
BY

Peter Neofytides
Its:

TOWN OF AUSTERLITZ
RECEIVED
APR 27 2022
PLANNING BOARD
COLUMBIA COUNTY

Bargain & Sale Deed

COPY

H

STATE OF NEW YORK, COUNTY OF Queens, ss.

On the 26th day of October, 2005, before me, the undersigned, personally appeared PETER NEOFYTIDES personally known to me or proved to me on the basis of satisfactory evidence to be the individual whose name is subscribed to the within instrument and acknowledged to me that he/she executed the same in his/her capacity, and that by his/her signature on the instrument, the individual or person upon behalf of which the individual acted, executed the instrument.

Georgia Mavronasios

Notary Public

GEORGIA MAVRONASIOS
Notary Public, State of New York
No. 41-MA4988005
Qualified in Queens County
Commission Expires October 28, 2005

Record & Return to:
Baldwin & Bloomstein
Attorneys at Law
P.O. Box 248
Hillsdale, NY 12529

TOWN OF AUSTERLITZ
RECEIVED
APR 27 2022
PLANNING BOARD
COLUMBIA COUNTY

Bargain & Sale Deed 3

COPY

PLEASE TYPE OR PRESS FIRMLY WHEN WRITING ON FORM
INSTRUCTIONS: http:// www.orps.state.ny.us or PHONE (518) 473-7222

FOR COUNTY USE ONLY

C1. SWIS Code: 102200

C2. Date Deed Recorded: 12 / 01 / 05 (Month Day Year)

C3. Book: 560 C4. Page: 790

REAL PROPERTY TRANSFER REPORT

STATE OF NEW YORK
STATE BOARD OF REAL PROPERTY SERVICES

RP - 5217

RP-5217 Rev. 3/97

PROPERTY INFORMATION

1. Property Location: Street Number / Street Name: Rigor Hill Road
City or Town: Austerlitz Village: Zip Code: 12017

2. Buyer Name: 365 Rigor Hill Road, LLC (Last Name / Company) First Name:
Last Name / Company First Name:

3. Tax Billing Address: Indicate where future Tax Bills are to be sent if other than buyer address (at bottom of form)
Last Name / Company First Name:
Street Number and Street Name City or Town State Zip Code

4. Indicate the number of Assessment Roll parcels transferred on the deed: 1 # of Parcels OR ☐ Part of a Parcel

(Only if Part of a Parcel) Check as they apply:
4A. Planning Board with Subdivision Authority Exists ☐
4B. Subdivision Approval was Required for Transfer ☐
4C. Parcel Approved for Subdivision with Map Provided ☐

5. Deed Property Size: Front Feet x Depth OR 94.00 Acres

6. Seller Name: 11-11 40th Avenue Assoc., LLC (Last Name / Company) First Name:
Last Name / Company First Name:

7. Check the box below which most accurately describes the use of the property at the time of sale:

A [1] One Family Residential
B [ ] 2 or 3 Family Residential
C [ ] Residential Vacant Land
D [ ] Non Residential Vacant Land
E [ ] Agricultural
F [ ] Commercial
G [ ] Apartment
H [ ] Entertainment / Amusement
I [ ] Community Service
J [ ] Industrial
K [ ] Public Service
L [ ] Forest

and land

Check the boxes below as they apply:
8. Ownership Type is Condominium ☐
9. New Construction on Vacant Land ☐
10A. Property Located within an Agricultural District ☐
10B. Buyer received a disclosure notice indicating that the property is in an Agricultural District ☐

SALE INFORMATION

11. Sale Contract Date: N/A / / (Month Day Year)

12. Date of Sale / Transfer: OCT. 26, 2005 (Month Day Year)

13. Full Sale Price: $0.00

(Full Sale Price is the total amount paid for the property including personal property. This payment may be in the form of cash, other property or goods, or the assumption of mortgages or other obligations.) *Please round to the nearest whole dollar amount.*

14. Indicate the value of personal property included in the sale: $0.00

15. Check one or more of these conditions as applicable to transfer:
A [ ] Sale Between Relatives or Former Relatives
B [X] Sale Between Related Companies or Partners in Business
C [ ] One of the Buyers is also a Seller
D [ ] Buyer or Seller is Government Agency or Lending Institution
E [ ] Deed Type not Warranty or Bargain and Sale (Specify Below)
F [ ] Sale of Fractional or Less than Fee Interest (Specify Below)
G [ ] Significant Change in Property Between Taxable Status and Sale Date
H [ ] Sale of Business is Included in Sale Price
I [ ] Other Unusual Factors Affecting Sale Price (Specify Below)
J [ ] None

ASSESSMENT INFORMATION - Data should reflect the latest Final Assessment Roll and Tax Bill

16. Year of Assessment Roll from which information taken: 2004

17. Total Assessed Value (of all parcels in transfer): 258,000

18. Property Class: 220 - 1

19. School District Name: Taconic Hills CSD

20. Tax Map Identifier(s) / Roll Identifier(s) (If more than four, attach sheet with additional identifier(s))

94.-1-22.1 (split)

CERTIFICATION

I certify that all of the items of information entered on this form are true and correct (to the best of my knowledge and belief) and I understand that the making of any willful false statement of material fact herein will subject me to the provisions of the penal law relative to the making and filing of false instruments.

BUYER

365 Rigor Hill Road, LLC, by:
Buyer Signature Date: 10 / 26 / 05

11-11 40th Avenue
Street Number Street Name (after sale)

Long Island City NY 11101
City or Town State Zip Code

SELLER

11-11 40th Avenue Assoc., LLC, by:
Seller Signature Date: 10 / 26 / 05

BUYER'S ATTORNEY

Bloomstein, Alexander W.
Last Name First Name

518 325-3141
Area Code Telephone Number

NEW YORK STATE COPY

TOWN OF AUSTERLITZ RECEIVED APR 27 2022 PLANNING BOARD COLUMBIA COUNTY

COPY

PL-2022-09

SunCommon / Andra Miller

Residential Solar

TOWN OF AUSTERLITZ NEW YORK
BUILDING PERMIT APPLICATION

TAX MAP # 86.1-1-7

Expiration Date: _____

Permit # _____

Permit fee _____

1. LOCATION:
House No. 831 Road Name State Rt 203
Spencertown NY 12165
Subdivision Name & Lot No. (if any) N/A

2. PROPERTY OWNER Andra Miller PHONE 917-865-7106
CURRENT ADDRESS 831 State St. 203
CITY & STATE Spencertown, NY ZIP 12165

3. CONTRACT OR BUILDER 1155 Flatbush Rd PHONE 845-475-4515
CURRENT ADDRESS
CITY & STATE Kingston, NY ZIP 12401

4. ZONING DISTRICT ☑ RR -RUAL RESIDENTIAL ☐ A- HM AUSTERLITZ HAMLET ☐ S – HM SPENCERTOWN HAMLET

5. EXISTING USE & OCCUPANCY: Residential Home

6. INTENDED USE & OCCUPANCY: Residential Home with solar elecrtric system

7. NATURE OF WORK: ☐ NEW BUILDING ☐ ADDITION ☐ ALTERATION ☐ DECK ☐ SHED ☐ SWIMMING POOL
☐ DEMOLITION ☑ OTHER

8. ADDITIONAL DESCRIPTION Installation of 50 LG435N2T-E6 Modules and 2 SMA SB 7.0-1SP-US-41 AND 1 SMA SB3.8-1SP-US-41 INVERTERS ON A GROUND MOUNTED SYSTEM

9. WILL THIS PROPOSAL: (Please answer yes or no to each question)

a. Involve new, or alterations to, electrical wiring? Y

b. Involve new, or alterations to, or additional use of, a sewage disposal system? N

c. Require installation, or changes in location, of a driveway? N

d. Involve a change in use or occupancy? N

10. SIZE OF BUILDING N/A NUMBER OF STORIES N/A DEPTH N/A WIDTH N/A HEIGHT N/A

11. LOT DIMENSIONS N/A WIDTH N/A DEPTH

12. ESTIMATED COST $ 51.000

over

COPY

SEE ATTACHED PLANS

REAR YARD

FRONT YARD

12. SET BACKS - LEFT YARD SEE ATTACHED RIGHT YARD SEE ATTACHED REAR YARD SEE FRONT YARD SEE ATTACHED

13. Please sketch and locate structure or object within grid showing front, back and side setbacks.

14. ***APPLICATION IS HEREBY MADE to the Building Department for the issuance of a Building Permit pursuant to the New York State Uniform Fire Prevention and Building Code (Title 9 NYCRR) for the construction of buildings, additions or alterations, or for removal or demolition as herein described. The applicant agrees to comply with all applicable laws, ordinances and regulations, including New York State Energy Code requirements, and the Town of Austerlitz Zoning Ordinance.***

GRAYSON BALL

Signature of Applicant _____ Date 4/4/22

Approved ☐ YES ☒ NO By [signature] Date 4/7/22 Title CEO

Fee Paid $_____ Date Received _____ Check# _____

PERMIT DENIED ☒

REASON 195-25.1(E2) Site Plan req. for ground mounted solar

REFERED TO PLANNING BOARD ☐

COPY

DocuSign Envelope ID: 4C040F39-C8A6-4973-9C98-28C839DA82F7

9/26/2021

Dear SunCommon,

I hereby authorize you to apply for a building permit on my behalf, for the purpose of installing a solar electric and or battery system at my property located at:

831 State Route 203
Spencertown, NY 12165

Property Owner Signature: DocuSigned by: Jonathan Miller 107C2E043724445... **Date:** 9/26/2021

Property Owner Name: Jonathan Miller

COPY

PERMIT APPLICATION

NY State Unified Solar Permit

Unified solar permitting is available statewide for eligible solar photovoltaic (PV) installations. Municipal authorities that adopt the unified permit streamline their process while providing consistent and thorough review of solar PV permitting applications and installations. Upon approval of this application and supporting documentation, the authority having jurisdiction (AHJ) will issue a building and/or electrical permit for the solar PV installation described herein.

PROJECT ELIGIBILITY FOR UNIFIED PERMITTING PROCESS

By submitting this application, the applicant attests that the proposed project meets the established eligibility criteria for the unified permitting process (subject to verification by the AHJ). The proposed solar PV system installation:

☒ Yes ☐ No 1. Has a rated DC capacity of 25 kW or less.

☒ Yes ☐ No 2. Is not subject to review by an Architectural or Historical Review Board. (If review has already been issued answer YES and attach a copy)

☒ Yes ☐ No 3. Does not need a zoning variance or special use permit. (If variance or permit has already been issued answer YES and attach a copy)

☒ Yes ☐ No 4. Is mounted on a permitted roof structure, on a legal accessory structure, or ground mounted on the applicant's property. If on a legal accessory structure, a diagram showing existing electrical connection to structure is attached.

☒ Yes ☐ No 5. The Solar Installation Contractor complies with all licensing and other requirements of the jurisdiction and the State.

☒ Yes ☐ No 6. If the structure is a sloped roof, solar panels are mounted parallel to the roof surface.

For solar PV systems not meeting these eligibility criteria, the applicant is not eligible for the Unified Solar Permit and must submit conventional permit applications. Permit applications may be downloaded here: https://austerlitzny.com/document-center/building-code-enforcement-forms.html or obtained in person at Austerlitz Town Hall, 816 State Route 203, Spencertown NY 12165 (Glenn Smith, Building Inspection/Code Enforcement) during business hours Mon and Fri 8:30-10:30 Wed 9:30-12:30. (Call to confirm)

SUBMITTAL INSTRUCTIONS

For projects meeting the eligibility criteria, this application and the following attachments will constitute the Unified Solar Permitting package.

- This application form, with all fields completed and bearing relevant signatures.
- Permitting fee of $6.00 per $1000 or a minimum of $30, by cash or check payable to Town of Austerlitz.
- Required Construction Documents for the solar PV system type being installed, including required attachments.

Completed permit applications can be submitted electronically to gsmith@austerlitzny.com or in person at Austerlitz Town Hall, 816 State Route 203, Spencertown NY 12165 during business hours Mon and Fri 8:30-10:30AM Wed 9:30Am-12:30PM.

APPLICATION REVIEW TIMELINE

Permit determinations will be issued within 10 calendar days upon receipt of complete and accurate applications. The municipality will provide feedback within 10 calendar days of receiving incomplete or inaccurate applications.

FOR FURTHER INFORMATION

Questions about this permitting process may be directed to Glenn Smith, Building Inspection/Code Enforcement, PO Box 238, Spencertown, NY 12165. (518)392-5007 Extension 303.

COPY

PROPERTY OWNER

Andra — Property Owner's First Name
Miller — Last Name
Title

831 State Route 203 — Property Address

Spencertown — City
NY — State
12165 — Zip

86.1 — Section
1 — Block
7 — Lot Number

EXISTING USE

☒ Single Family ☐ 2-4 Family ☐ Commercial ☐ Other

PROVIDE THE TOTAL SYSTEM CAPACITY RATING (SUM OF ALL PANELS)

Solar PV System: 21.75 kW DC

SELECT SYSTEM CONFIGURATION

Make sure your selection matches the Construction Documents included with this application.

☐ Supply side connection with
☐ microinverters Supply side connection
☐ with DC optimizers Supply side
☐ Load side connection with DC optimizers
☐ Load side connection with microinverters
☒ Load side connection with string inverter

SOLAR INSTALLATION CONTRACTOR

SunCommon — Contractor Business Name

1155 Flatbush Road — Contractor Business Address
Kingston — City
NY — State
12401 — Zip

Hannah Ferguson — Contractor Contact Name
845-423-3494 — Phone Number

Contractor License Number(s)
hv.rpm@suncommon.com — Contractor Email

SunCommon — Electrician Business Name

1155 Flatbush Road — Electrician Business Address
Kingston — City
NY — State
12401 — Zip

Hannah Ferguson — Electrician Contact Name
845-423-3494 — Phone Number

Electrician License Number(s)
hv.rpm@suncommon.com — Electrician Email

Please sign below to affirm that all answers are correct and that you have met all the conditions and requirements to submit a unified solar permit.

See attached permit authorization — Property Owner's Signature
Date

Hannah Ferguson — Solar Installation Company Representative Signature
10 February 2022 — Date

COPY

NY State Unified Solar Permit

This information bulletin is published to guide applicants through the unified solar PV permitting process for solar photovoltaic (PV) projects 25 kW in size or smaller. This bulletin provides information about submittal requirements for plan review, required fees, and inspections.

PERMITS AND APPROVALS REQUIRED

The following permits are required to install a solar PV system with a nameplate DC power output of 25 kW or less:

a) Unified Solar Permit

b) Town of Austerlitz NY BUILDING BERMIT. All zoning Law requirements must be met including Solar Energy System requirements as outlined in Town of Austerlitz NY Zoning Law Section 195-25.1 (incorporating Local Law 1-2017) as well as Section 195-58 Definitions. Planning Board review IS required for Ground Mounted solar PV installations. Planning Board review is NOT required for roof mounted systems. Large scale solar systems (larger than 25 kw are not permitted in the Town of Austerlitz.

Fire Department approval IS NOT required for solar PV installations but may be requested by the Building Inspector.

SUBMITTAL REQUIREMENTS

In order to submit a complete permit application for a new solar PV system, the applicant must include:

a) Completed Standard Permit Application form which includes confirmed eligibility for the Unified Solar Permitting process. This permit application form can be downloaded at https://www.nyserda.ny.gov/all-programs/programs/ny-sun/communities-and-local-governments/solar-guidebook-for-local-governments .

b) Construction Documents, with listed attachments [SAMPLES ARE AVAILABLE IN Understanding Solar PV Permitting and Inspecting in New York State https://www.nyserda.ny.gov/all-programs/programs/ny-sun/communities-and-local-governments/solar-guidebook-for-local-governments . Construction Documents must be by stamped and signed by a New York State Registered Architect or New York State Licensed Professional Engineer.

Town of Austerlitz NY, through adopting the Unified Solar Permitting process, requires contractors to provide construction documents, such as the examples included in the Understanding Solar PV Permitting and Inspecting in New York State document. Should the applicant wish to submit Construction Documents in another format, ensure that the submittal includes the following information:

- Manufacturer/model number/quantity of solar PV modules and inverter(s).
- String configuration for solar PV array, clearly indicating the number of modules in series and strings in parallel (if applicable).
- Combiner boxes: Manufacturer, model number, NEMA rating.
- From array to the point of interconnection with existing (or new) electrical distribution equipment: identification of all raceways (conduit, boxes, fittings, etc.), conductors and cable assemblies, including size and type of raceways, conductors, and cable assemblies.
- Sizing and location of the EGC (equipment grounding conductor).
- Sizing and location of GEC (grounding electrode conductor, if applicable).
- Disconnecting means of both AC and DC including indication of voltage, ampere, and NEMA rating.
- Interconnection type/location (supply side or load side connection)
- For supply side connections only, indication that breaker or disconnect meets or exceeds available utility fault current rating kAIC (amps interrupting capacity in thousands).
- Ratings of service entrance conductors (size insulation type AL or CU), proposed service disconnect, and overcurrent protection device for new supply side connected solar PV system (reference NEC 230.82, 230.70).
- Rapid shutdown device location/method and relevant labeling.

COPY

c) (For Roof Mounted Systems) A roof plan showing roof layout, solar PV panels and the following fire safety items: approximate location of roof access point, location of code-compliant access pathways, code exemptions, solar PV system fire classification, and the locations of all required labels and markings.

d) Provide construction drawings with the following information:

- The type of roof covering and the number of roof coverings installed.
- Type of roof framing, size of members, and spacing.
- Weight of panels, support locations, and method of attachment.
- Framing plan and details for any work necessary to strengthen the existing roof structure.
- Site-specific structural calculations.

e) Where an approved racking system is used, provide documentation showing manufacturer of the racking system, maximum allowable weight the system can support, attachment method to roof or ground, and product evaluation information or structural design for the rack.

PLAN REVIEW

Permit applications can be submitted to Glenn Smith, Building Inspection/Code Enforcement in person at 816 State Route 203, Spencertown NY or electronically through: gsmith@austerlitzny.com .

FEES

$6 per 1000 or a minimum of $30

INSPECTIONS

Once all permits to construct the solar PV installation have been issued and the system has been installed, it must be inspected before final approval is granted for the solar PV system. On-site inspections can be scheduled by contacting Glenn Smith, Building Inspection/Code Enforcement by telephone at (518)392-5007 Extion 303 or electronically at gsmith@austerlitzny.com
Inspection requests received within business hours are typically scheduled for the next business day. If next business day is not available, inspection should happen within a five-day window. MUNICIPALITY ACCEPTS THIRD PARTY INSPECTIONS. A LIST OF APPROVED INSPECTORS will be provided upon request.

In order to receive final approval, the following inspections are required:

[FINAL INSPECTION] The applicant must contact Glenn Smith, Building Inspection/Code Enforcement when ready for a final inspection. During this inspection, the inspector will review the complete installation to ensure compliance with codes and standards, as well as confirming that the installation matches the records included with the permit application. The applicant must have ready, at the time of inspection, the following materials and make them available to the inspector:

- Copies of as-built drawings and equipment specifications, if different than the materials provided with the application.
- Photographs of key hard to access equipment, including;
  - Example of array attachment point and flashing/sealing methods used.
  - Opened rooftop enclosures, combiners, and junction boxes.
  - Bonding point with premises grounding electrode system.
  - Supply side connection tap method/device.
  - Module and microinverter/DC optimizer nameplates.
  - Microinverter/DC optimizer attachment.

COPY

Town of Austerlitz has adopted a standardized inspection checklist, which can be found in the Understanding Solar PV Permitting and Inspecting in New York State document, found here: https://www.nyserda.ny.gov/all-programs/programs/ny-sun/communities-and-local-governments/solar-guidebook-for-local-governments.

The inspection checklist provides an overview of common points of inspection that the applicant should be prepared to show compliance. If not available, common checks include the following:

- Number of solar PV modules and model number match plans and specification sheets number match plans and specification sheets.
- Array conductors and components are installed in a neat and workman-like manner.
- Solar PV array is properly grounded.
- Electrical boxes and connections are suitable for environment.
- Array is fastened and sealed according to attachment detail.
- Conductor's ratings and sizes match plans.
- Appropriate signs are property constructed, installed and displayed, including the following:
  - Sign identifying PV power source system attributes at DC disconnect.
  - Sign identifying AC point of connection.
  - Rapid shutdown device meets applicable requirements of NEC 690.12.
- Equipment ratings are consistent with application and installed signs on the installation, including the following:
  - Inverter has a rating as high as max voltage on PV power source sign.
  - DC-side overcurrent circuit protection devices (OCPDs) are DC rated at least as high as max voltage on sign.
  - Inverter is rated for the site AC voltage supplied and shown on the AC point of connection sign.
  - OCPD connected to the AC output of the inverter is rated at least 125% of maximum current on sign and is no larger than the maximum OCPD on the inverter listing label.
  - Sum of the main OCPD and the inverter OCPD is rated for not more than 120% of the buss bar rating.

UNIFIED SOLAR PERMITTING RESOURCES

The jurisdiction has adopted the following documents from the New York Unified Solar Permit process:

- Standard Application https://austerlitzny.com/document-center/building-code-enforcement-forms.html
- Understanding Solar PV Permitting and Inspecting in New York State document, which includes sample construction documents, inspection checklist, design review checklist, and labelling guide https://www.nyserda.ny.gov/all-programs/programs/ny-sun/communities-and-local-governments/solar-guidebook-for-local-governments.

DEPARTMENTAL CONTACT INFORMATION

For additional information regarding this permit process, please consult our departmental website at Austerlitzny.com or contact Building Inspection/Code Enforcement at (518)392-5007 Extension 303

COPY

N. Y. S. DEPARTMENT OF STATE
DIVISION OF CORPORATIONS

ALBANY, NY 12231-0001

FILING RECEIPT

ENTITY NAME : SUNCOMMON (FICTITIOUS NAME)

DOCUMENT TYPE : ASSUMED NAME CERTIFICATE

FILER:

FILED: 12/01/2020
CASH#: 483317
FILM#: 20201201052

DIANA DIMURO SOLARCOMMUNITIES, INC.
13 HOOK ROAD

RHINEBECK NY 12572

PRINCIPAL LOCATION

442 US-2

WATERBURY
VT 05676

COMMENT: SOLARCOMMUNITIES INC. (CORP NAME)

ASSUMED NAME

SUNCOMMON

SERVICE COMPANY : +++ NO SERVICE COMPANY +++

CODE:
BOX :

FEES	450.00	PAYMENTS:	450.00
FILING :	25.00	CASH :	
COUNTY :	400.00	CHECK :	
COPIES :	.00	C CARD :	450.00
MISC :	.00		
HANDLE :	25.00		
		REFUND :	

DO3HD108

DOS-281 (04/2007)

COPY

Workers' Compensation Board

CERTIFICATE OF INSURANCE COVERAGE
DISABILITY AND PAID FAMILY LEAVE BENEFITS LAW

PART 1. To be completed by Disability and Paid Family Leave Benefits Carrier or Licensed Insurance Agent of that Carrier

1a. Legal Name & Address of Insured (use street address only) SOLARCOMMUNITIES INC DBA SUNCOMMON 1155 FLATBUSH RD KINGSTON, NY 12401-7011 Work Location of Insured *(Only required if coverage is specifically limited to certain locations in New York State, i.e., a Wrap-Up Policy)*	1b. Business Telephone Number of Insured (866) 452-7652 1c. Federal Employer Identification Number of Insured or Social Security Number 454027316
2. Name and Address of Entity Requesting Proof of Coverage (Entity Being Listed as the Certificate Holder) TOWN OF AUSTERLITZ PO BOX 238 SPENCERTOWN, NY 12165	3a. Name of Insurance Carrier **New York State Insurance Fund (NYSIF)** 3b. Policy Number of Entity Listed in Box "1a" DBL 5264 71 - 9 3c. Policy effective period 08/15/2021 to 08/15/2022

4. Policy provides the following benefits:
   - [x] A. Both disability and paid family leave benefits
   - [ ] B. Disability benefits only
   - [ ] C. Paid family leave benefits only

5. Policy covers:
   - [x] A. All of the employer's employees eligible under the NYS Disability and Paid Family Leave Benefits Law
   - [ ] B. Only the following class or classes of employer's employees:

Under penalty of perjury, I certify that I am an authorized representative or licensed agent of the insurance carrier referenced above and that the named insured has NYS Disability and/or Paid Family Leave Benefits insurance coverage as described above.

Date Signed 1/11/2022 By Kristin Markwica
(Signature of insurance carrier's authorized representative or NYS Licensed Insurance Agent of that insurance carrier)

Telephone Number (866) 697-4332 Name and Title **Kristin Markwica, Head of Disability Insurance Unit**

IMPORTANT: If Box 4A and 5A are checked, and this form is signed by the insurance carrier's authorized representative or NYS Licensed Insurance Agent of that carrier,this certificate is COMPLETE. Mail it directly to the certificate holder.

If Box 4B, 4C or 5B is checked, this certificate is NOT COMPLETE for purposes of Section 220, Subd. 8 of the NYS Disability and Paid Family Leave Benefits Law. It must be mailed for completion to the Workers' Compensation Board, DB Plans Acceptance Unit, PO Box 5200, Binghamton, NY 13902-5200

PART 2. To be completed by the NYS Workers' Compensation Board (Only if Box 4C or 5B of Part 1 has been checked)

State of New York
Workers' Compensation Board

According to information maintained by the NYS Workers' Compensation Board, the above-named employer has complied with the NYS Disability and Paid Family Leave Benefits Law with respect to all of his/her employees.

Date Signed _____ By _____
(Signature of Authorized NYS Workers' Compensation Board Employee)

Telephone Number _____ Name and Title _____

Please Note: *Only insurance carriers licensed to write NYS disability and paid family leave benefits insurance policies and NYS licensed insurance agents of those insurance carriers are authorized to issue Form DB-120.1.* ***Insurance brokers are NOT authorized to issue this form.***

COPY

Certificate Number 672016

SOLACOM-01

LVERSELLI

CERTIFICATE OF LIABILITY INSURANCE

DATE (MM/DD/YYYY) 1/12/2022

THIS CERTIFICATE IS ISSUED AS A MATTER OF INFORMATION ONLY AND CONFERS NO RIGHTS UPON THE CERTIFICATE HOLDER. THIS CERTIFICATE DOES NOT AFFIRMATIVELY OR NEGATIVELY AMEND, EXTEND OR ALTER THE COVERAGE AFFORDED BY THE POLICIES BELOW. THIS CERTIFICATE OF INSURANCE DOES NOT CONSTITUTE A CONTRACT BETWEEN THE ISSUING INSURER(S), AUTHORIZED REPRESENTATIVE OR PRODUCER, AND THE CERTIFICATE HOLDER.

IMPORTANT: If the certificate holder is an ADDITIONAL INSURED, the policy(ies) must have ADDITIONAL INSURED provisions or be endorsed. If SUBROGATION IS WAIVED, subject to the terms and conditions of the policy, certain policies may require an endorsement. A statement on this certificate does not confer rights to the certificate holder in lieu of such endorsement(s).

PRODUCER
AssuredPartners New England, Inc.
38 Eastwood Drive, Suite 105
South Burlington, VT 05403

CONTACT NAME: Karen Disipio
PHONE (A/C, No, Ext): (860) 426-6160 FAX (A/C, No): (860) 426-6160
E-MAIL ADDRESS: Karen.Disipio@AssuredPartners.com

INSURER(S) AFFORDING COVERAGE	NAIC #
INSURER A : Arch Insurance Co.	11150
INSURER B : Merchants National Ins. Co.	12775
INSURER C :	
INSURER D :	
INSURER E :	
INSURER F :	

INSURED
DBA SunCommon
442 US Route 2
Waterbury, VT 05676

COVERAGES CERTIFICATE NUMBER: REVISION NUMBER:

THIS IS TO CERTIFY THAT THE POLICIES OF INSURANCE LISTED BELOW HAVE BEEN ISSUED TO THE INSURED NAMED ABOVE FOR THE POLICY PERIOD INDICATED. NOTWITHSTANDING ANY REQUIREMENT, TERM OR CONDITION OF ANY CONTRACT OR OTHER DOCUMENT WITH RESPECT TO WHICH THIS CERTIFICATE MAY BE ISSUED OR MAY PERTAIN, THE INSURANCE AFFORDED BY THE POLICIES DESCRIBED HEREIN IS SUBJECT TO ALL THE TERMS, EXCLUSIONS AND CONDITIONS OF SUCH POLICIES. LIMITS SHOWN MAY HAVE BEEN REDUCED BY PAID CLAIMS.

INSR LTR	TYPE OF INSURANCE	ADDL INSD	SUBR WVD	POLICY NUMBER	POLICY EFF (MM/DD/YYYY)	POLICY EXP (MM/DD/YYYY)	LIMITS	
A	X COMMERCIAL GENERAL LIABILITY			ZAGLB9248800	11/1/2021	10/1/2022	EACH OCCURRENCE	$ 1,000,000
	CLAIMS-MADE / X OCCUR						DAMAGE TO RENTED PREMISES (Ea occurrence)	$ 300,000
							MED EXP (Any one person)	$ 10,000
							PERSONAL & ADV INJURY	$ 1,000,000
	GEN'L AGGREGATE LIMIT APPLIES PER:						GENERAL AGGREGATE	$ 2,000,000
	POLICY / PRO-JECT / LOC						PRODUCTS - COMP/OP AGG	$ 2,000,000
	OTHER:							$
A	AUTOMOBILE LIABILITY			ZAGLB9248800	11/1/2021	10/1/2022	COMBINED SINGLE LIMIT (Ea accident)	$ 2,000,000
	X ANY AUTO						BODILY INJURY (Per person)	$
	OWNED AUTOS ONLY / SCHEDULED AUTOS						BODILY INJURY (Per accident)	$
	HIRED AUTOS ONLY / NON-OWNED AUTOS ONLY						PROPERTY DAMAGE (Per accident)	$
								$
B	UMBRELLA LIAB / X OCCUR			EXL0002944	11/1/2021	10/1/2022	EACH OCCURRENCE	$ 5,000,000
	X EXCESS LIAB / CLAIMS-MADE						AGGREGATE	$ 5,000,000
	DED / RETENTION $							$
A	WORKERS COMPENSATION AND EMPLOYERS' LIABILITY			ZAWCI9968500	11/1/2021	10/1/2022	X PER STATUTE / OTH-ER	
	ANY PROPRIETOR/PARTNER/EXECUTIVE OFFICER/MEMBER EXCLUDED? (Mandatory in NH) Y / N: N	N / A					E.L. EACH ACCIDENT	$ 1,000,000
	If yes, describe under DESCRIPTION OF OPERATIONS below						E.L. DISEASE - EA EMPLOYEE	$ 1,000,000
							E.L. DISEASE - POLICY LIMIT	$ 1,000,000

DESCRIPTION OF OPERATIONS / LOCATIONS / VEHICLES (ACORD 101, Additional Remarks Schedule, may be attached if more space is required)

CERTIFICATE HOLDER

Town of Austerlitz
PO Box 238
Spencertown, NY 12165

CANCELLATION

SHOULD ANY OF THE ABOVE DESCRIBED POLICIES BE CANCELLED BEFORE THE EXPIRATION DATE THEREOF, NOTICE WILL BE DELIVERED IN ACCORDANCE WITH THE POLICY PROVISIONS.

AUTHORIZED REPRESENTATIVE

Mike Ross

COPY

© 1988-2015 ACORD CORPORATION. All rights reserved.

The ACORD name and logo are registered marks of ACORD

LG NeON®H

LG435N2T-E6

[redacted]

144

435W

The LG NeON® H is designed to absorb sunlight both from the front and the rear sides of its NeON® cell by using a transparent backsheet. The dual faces of the cell result in higher energy generation.

25 YEAR PRODUCT · PERFORMANCE WARRANTY

c UL us

Features

25-Year Limited Product Warranty

The NeON® H is covered by a 25-year limited product warranty.

Bifacial Energy Yield

LG NeON® H modules use highly efficient bifacial solar cell, "NeON" applied Cello technology. Through the Cello technology, LG NeON® H can achieve up to 30% more energy than standard PV modules.

Better Performance on a Sunny Day

LG NeON® H now performs better on sunny days, thanks to its improved temperature coefficient.

More Generation on a Cloudy Day

The LG NeON® H performs well on cloudy days; weak sunlight conditions cause a low energy reduction.

COPY

When you go solar, ask for the brand you can trust: LG Solar

About LG Electronics USA, Inc.

LG Electronics is a global leader in electronic products in the clean energy markets by offering solar PV panels and energy storage systems. The company first embarked on a solar energy source research program in 1985, supported by LG Group's vast experience in the semi-conductor, LCD, chemistry and materials industries. In 2010, LG Solar successfully released its first MonoX® series to the market, which is now available in 32 countries. The NeON® (previous MonoX® NeON), NeON® 2, NeON® 2 BiFacial won the "Intersolar AWARD" in 2013, 2015 and 2016, which demonstrates LG's leadership and innovation in the solar industry.

LG Life's Good

LG NeON®H

LG435N2T-E6

General Data

Cell Properties (Material/Type)	Monocrystalline/N-type
Cell Maker	LG
Cell Configuration	144 Cells (6 x 24)
Number of Busbars	9EA
Module Dimensions (L x W x H)	2,130mm x 1,042mm x 40 mm
Weight	23 kg
Glass (Thickness/Material)	2.8mm/Tempered Glass with AR Coating
Backsheet (Color)	Transparent
Frame (Material)	Anodized Aluminium
Junction Box (Protection Degree)	IP 68 with 3 Bypass Diodes
Cables (Length)	1,400mm x 2EA
Connector (Type/Maker)	MC 4/MC

Certifications and Warranty

Certifications*	IEC 61215-1/-1-1/2:2016, IEC 61730-1/2 2016, UL 61730
	ISO 9001, ISO 14001, ISO 50001
	OHSAS 18001
Salt Mist Corrosion Test	IEC 61701:2012 Severity 6
Ammonia Corrosion Test	IEC 62716:2013
Module Fire Performance	Type 1 (UL 1703)
Fire Rating	Class C (UL 790)
Solar Module Product Warranty	25 Years
Solar Module Output Warranty	Linear Warranty*

*Initial 107%, 1st year 105.4%, After 1st year -0.35%/year, 96.9% at year 25 (Based on BiFi100)

Temperature Characteristics

NMOT*	[°C]	42 ± 3
Pmax	[%/°C]	-0.36
Voc	[%/°C]	-0.26
Isc	[%/°C]	0.03

*NMOT (Nominal Module Operating Temperature) Irradiance 800 W/m², Ambient temperature 20°C, Wind speed 1 m/s, Spectrum AM 1.5

Electrical Properties (NMOT)

Model		LG435N2T-E6		
		STC*	BiFi100**	BiFi200**
Maximum Power (Pmax)	[W]	327	349	372
MPP Voltage (Vmpp)	[V]	38.2	38.2	38.2
MPP Current (Impp)	[A]	8.55	9.14	9.73
Open Circuit Voltage (Voc)	[V]	45.9	45.9	45.9
Short Circuit Current (Isc)	[A]	8.98	9.60	10.22

I-V Curves

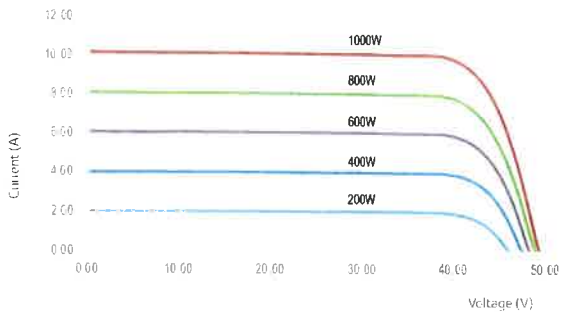

Electrical Properties

Model		LG435N2T-E6		
		STC*	BiFi100**	BiFi200**
Maximum Power (Pmax)	[W]	435	465	495
MPP Voltage (Vmpp)	[V]	40.7	40.7	40.7
MPP Current (Impp)	[A]	10.70	11.44	12.17
Open Circuit Voltage (Voc)	[V]	48.7	48.7	48.7
Short Circuit Current (Isc)	[A]	11.15	11.92	12.68
Module Efficiency	[%]	19.6	21.0	22.3
Pmax Bifaciality Coefficient	[%]	75 ± 5		
Power Tolerance	[%]	0 ~ +3		

*STC (Standard Test Condition): Irradiance 1000W/m², Cell temperature 25°C, AM 1.5, Measure Tolerance: ± 3%
**The electrical properties of BiFi100 and BiFi200 measure under the front side irradiance 1000W/m² + (100W/m² or 200W/m²)* BiFi. Use 100W/m² for BiFi100 and 200W/m² for BiFi200
2) IEC/ UL Certifications is scheduled to proceed

Operating Conditions

Operating Temperature	[°C]	-40 ~ +90
Maximum System Voltage	[V]	1,000(IEC)/1500(UL)
Maximum Series Fuse Rating	[A]	20
Mechanical Test Load* (Front)	[Pa/psf]	5,400/113
Mechanical Test Load* (Rear)	[Pa/psf]	3,000/63

*Test Load = Design Load x Safety Factor (1.5)

Packaging Configuration

Number of Modules per Pallet	[EA]	25
Number of Modules per 40' Container	[EA]	550
Number of Modules per 53' Container	[EA]	750
Packaging Box Dimensions (L x W x H)	[mm]	2,172 x 1,120 x 1,213
Packaging Box Dimensions (L x W x H)	[in]	85.5 x 44.1 x 47.8
Packaging Box Gross Weight	[kg]	593
Packaging Box Gross Weight	[lb]	1,307

Dimensions (mm/inch)

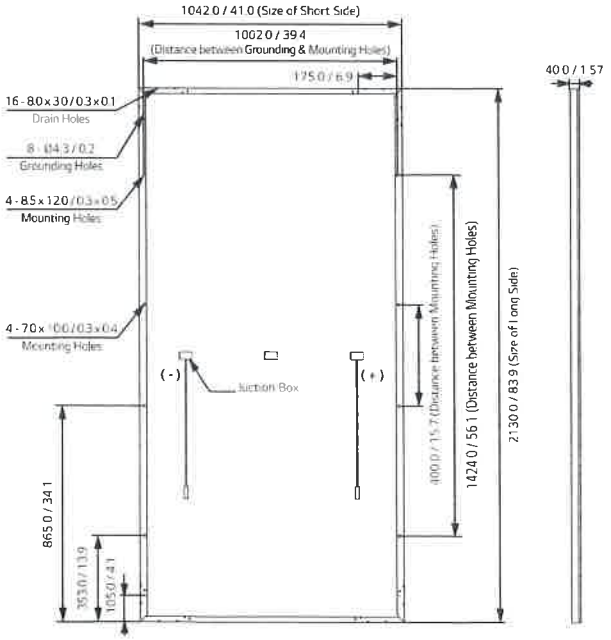

LG Life's Good

LG Electronics USA, Inc
Solar Business Division
2000 Millbrook Drive
Lincolnshire, IL 60069

www.lg-solar.com

Product specifications are subject to change without notice
LG435N2T-E6.pdf
012121

© 2021 LG Electronics USA, Inc. All rights reserved

COPY

SUNNY BOY
3.0-US / 3.8-US / 5.0-US / 6.0-US / 7.0-US / 7.7-US

Value-Added Improvements

- Superior integration with SMA's MLPE Power+ Solution
- World's first Secure Power Supply* now offers up to 2,000 W
- Full grid management capabilities ensure a utility-compliant solution for any market

Reduced Labor

- New Installation Assistant with direct access via smartphone minimizes time in the field
- Advanced communication interface with fewer components creates 50% faster setup and commissioning

Unmatched Flexibility

- SMA's proprietary OptiTrac™ Global Peak technology mitigates shade with ease
- Multiple independent MPPTs accommodate hundreds of stringing possibilities

Trouble-Free Servicing

- Two-part enclosure concept allows for simple, expedited servicing
- Equipped with SMA Smart Connected, a proactive service solution that is integrated into Sunny Portal

SUNNY BOY 3.0-US / 3.8-US / 5.0-US / 6.0-US / 7.0-US / 7.7-US

Reduce costs across your entire residential business model

COPY

The residential PV market is changing rapidly. Your bottom line matters more than ever—so we've designed a superior residential solution to help you decrease costs at every stage of your business operations. The Sunny Boy 3.0-US/3.8-US/5.0-US/6.0-US/7.0-US/7.7-US join the SMA lineup of field-proven solar technology backed by the world's #1 service team, along with a wealth of improvements. Simple design, improved stocking and ordering, value-driven sales support and streamlined installation are just some of the ways that SMA helps your business operate more efficiently. And, Sunny Boy's superior integration with the innovative Power+ Solution means installers have even more flexibility in addressing their toughest challenges. Finally, SMA Smart Connected will automatically detect errors and initiate the repair and replacement process so that installers can reduce service calls and save time and money.

Technical data	Sunny Boy 3.0-US		Sunny Boy 3.8-US		Sunny Boy 5.0-US	
	208 V	240 V	208 V	240 V	208 V	240 V
Input (DC)						
Max. PV power	4800 Wp		6144 Wp		8000 Wp	
Max. DC voltage	600 V					
Rated MPP voltage range	155 - 480 V		195 - 480 V		220 - 480 V	
MPPT operating voltage range	100 - 550 V					
Min. DC voltage / start voltage	100 V / 125 V					
Max. operating input current per MPPT	10 A					
Max. short circuit current per MPPT	18 A					
Number of MPPT tracker / string per MPPT tracker	2/1				3 / 1	
Output (AC)						
AC nominal power	3000 W	3000 W	3330 W	3840 W	5000 W	5000 W
Max. AC apparent power	3000 VA	3000 VA	3330 VA	3840 VA	5000 VA	5000 VA
Nominal voltage / adjustable	208 V / ●	240 V / ●	208 V / ●	240 V / ●	208 V / ●	240 V / ●
AC voltage range	183 - 229 V	211 - 264 V	183 - 229 V	211 - 264 V	183 - 229 V	211 - 264 V
AC grid frequency	60 Hz / 50 Hz					
Max. output current	14.5 A	12.5 A	16.0 A	16.0 A	24.0 A	21.0 A
Power factor (cos ϕ)	1					
Output phases / line connections	1 / 2					
Harmonics	< 4 %					
Efficiency						
Max. efficiency	97.2 %	97.6 %	97.3 %	97.6 %	97.3 %	97.6 %
CEC efficiency	96.2 %	96.3 %	96.4 %	96.7 %	96.7 %	96.9 %
Protection devices						
DC disconnect device / DC reverse polarity protection	● / ●					
Ground fault monitoring / Grid monitoring	●					
AC short circuit protection	●					
All-pole sensitive residual current monitoring unit (RCMU)	●					
Arc fault circuit interrupter (AFCI)	●					
Protection class / overvoltage category	I / IV					
General data						
Dimensions (W / H / D) in mm (in)	535 x 730 x 198 (21.1 x 28.5 x 7.8)					
Packaging dimensions (W / H / D) in mm (in)	600 x 800 x 300 (23.6 x 31.5 x 11.8)					
Weight / packaging weight	26 kg (57 lb) / 30 kg (66 lb)					
Temperature range: operating / non-operating	-25°C ...+60°C / -40°C ...+60°C					
Environmental protection rating	NEMA 3R					
Noise emission (typical)	39 dB(A)					
Internal power consumption at night	< 5 W					
Topology / Cooling concept	Transformerless / Convection					
Features						
Ethernet ports	2					
Secure Power Supply	●*					
Display (2 x 16 characters)	●					
2.4 GHz WLAN / External WLAN antenna	●/○					
Cellular (4G / 3G) / Revenue Grade Meter	○/○**					
Warranty: 10 / 15 / 20 years	●/○/○					
Certificates and approvals	UL 1741, UL 1741 SA incl. CA Rule 21 RSD, UL 1998, UL 1699B Ed. 1, IEEE1547, FCC Part 15 (Class A & B), CAN/CSA V22.2 107.1-1, HECO Rule 14H, PV Rapid Shutdown System Equipment					
Type designation	SB3.0-1SP-US-41 / SB3.0-1TP-US-41		SB3.8-1SP-US-41 / SB3.8-1TP-US-41		SB5.0-1SP-US-41 / SB5.0-1TP-US-41	

● Standard features ○ Optional features – Not available

NOTE: US inverters ship with gray lids. Data at nominal conditions * Not compatible with the SunSpec Rapid Shutdown functionality **Standard in SBX.X-1TP-US-41

Accessories

External WLAN antenna
EXTANT-US-40

SMA Rooftop
Communication Kit
ROOFCOMMKIT-P2-US

Revenue Grade
Meter Kit
RGM05KIT-US-10

Cellular Modem Kit
CELLMODKIT-US-10

COPY

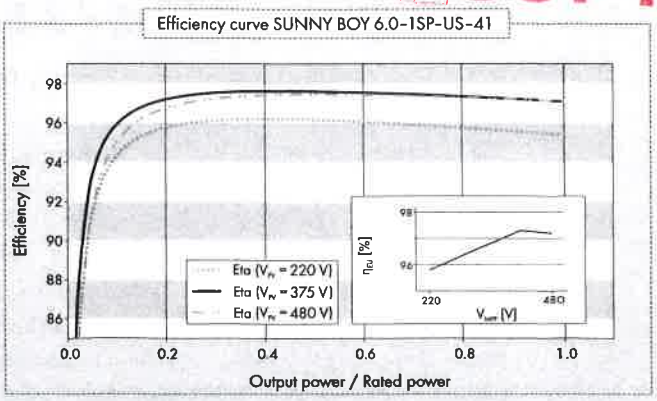

SIMPLE, FLEXIBLE DESIGN

Speed the completion of customer proposals and maximize the efficiency of your design team with the Sunny Boy-US series, which provides a new level of flexibility in system design by offering:

» Hundreds of stringing configurations and multiple independent MPPTs

» SMA's proprietary OptiTrac™ Global Peak shade mitigation technology

» Diverse application options including on- and off-grid compatibility

VALUE-DRIVEN SALES ENABLEMENT

SMA wants to enable your sales team by arming them with an abundance of feature/benefit support. Show your customers the value of the Sunny Boy-US series by utilizing:

» Secure Power Supply, now with 2,000 W of opportunity power in the event of a grid outage, as an increased value-add or upsell opportunity

» SMA's 35 year history and status as the #1 global inverter manufacturer instills homeowners with peace of mind and the long-term security they demand from a PV investment

» An economical solution for shade mitigation and the challenges of complex roofs

IMPROVED STOCKING AND ORDERING

Ensure that your back office business operations run smoothly and succinctly while mitigating potential errors. The Sunny Boy-US series can help achieve cost savings in these areas by providing:

» An integrated DC disconnect that simplifies equipment stocking and allows for a single inverter part number

» All communications integrated into the inverter, eliminating the need to order additional equipment

STREAMLINED INSTALLATION AND COMMISSIONING

Expedite your operations in the field by taking advantage of the new Sunny Boy's installer-friendly feature set including:

» Direct access via smartphone and utilization of SMA's Installation Assistant, which minimizes time/labor spent in the field and speeds the path to commissioning

» Simple commissioning and monitoring setup in a single online portal

» New! Advanced communication interface with fewer components allows for 50% faster commissioning

SUPERIOR SERVICE

SMA understands the factors that contribute to lifetime PV ownership cost, that's why the Sunny Boy-US series was designed for maximum reliability and backstopped by an unmatched service offering. Benefit from:

» SMA Smart Connected, a proactive service solution integrated into Sunny Portal that automatically detects errors and initiates the repair and replacement process

» The #1 service team in the PV industry, as recognized by IMS research, with experience servicing an installed base of more than 55 GW

COPY

DRAWING LIST

PV-01	TITLE SHEET
PV-02	SITE PLAN
PV-03	ARRAY LAYOUT
PV-04	ELECTRICAL DRAWING

ZONING DETAILS

ZONING CLASS:	01
TAX ID #	86.1-1-7
REQUIRED PROJECT SETBACKS (F,S,R):	15' F, 15' S, 15' R
ACTUAL PROJECT SETBACKS (F,S,R):	21' F, 68' / 288' S, 125' R

DESIGN CRITERIA

BASIC WIND SPEED:	115 MPH
WIND EXPOSURE CATEGORY	B
GROUND SNOW LOAD	40 PSF
ASCE CODE	7-10

SCOPE OF WORK

ARRAY(S): INSTALLATION OF GROUND-MOUNTED ARRAYS IN FIELD NORTH AND WEST OF PRIMARY STRUCTURE

CONDUIT RUNS: DC CONDUIT UNDERGROUND FROM NORTH ARRAY (B) TO SOUTH ARRAY (A), THEN SOUTH ALONG PROPERTY LINE BEFORE TURNING EAST WITH PROPERTY LINE TO EQUIPMENT STANCHION ON SOUTH WALL OF BARN. AC CONDUIT FROM EQUIPMENT STANCHION SOUTH-EAST TO HOUSE TO PENETRATE BASEMENT TO EQUIPMENT ON EAST WALL OF BASEMENT.

ELECTRICAL EQUIPMENT: INSTALLATION OF DC DISCONNECT A, DC DISCONNECT B ON REAR OF SOUTH ARRAY (A). INSTALLATION OF PV INVERTER A, PV INVERTER B, PV INVERTER C, PV AC COMBINER <RAPID SHUTDOWN INITIATION DEVICE> ON EQUIPMENT STANCHION WEST OF GARAGE. INSTALLATION OF AC DISCONNECT ON EAST BASEMENT WALL OF HOUSE.

INTERCONNECTION / ELECTRICAL SCOPE: INTERCONNECT SOLAR INVERTER VIA LINE SIDE TAP IN ADJACENT MAIN SERVICE DISCONNECT.

It is a violation of New York State Education Law Article 145 for any person, unless acting under the direct supervision of a licensed professional engineer, to alter this drawing in any way

AERIAL PARCEL VIEW (SCALE: 1" = 50')

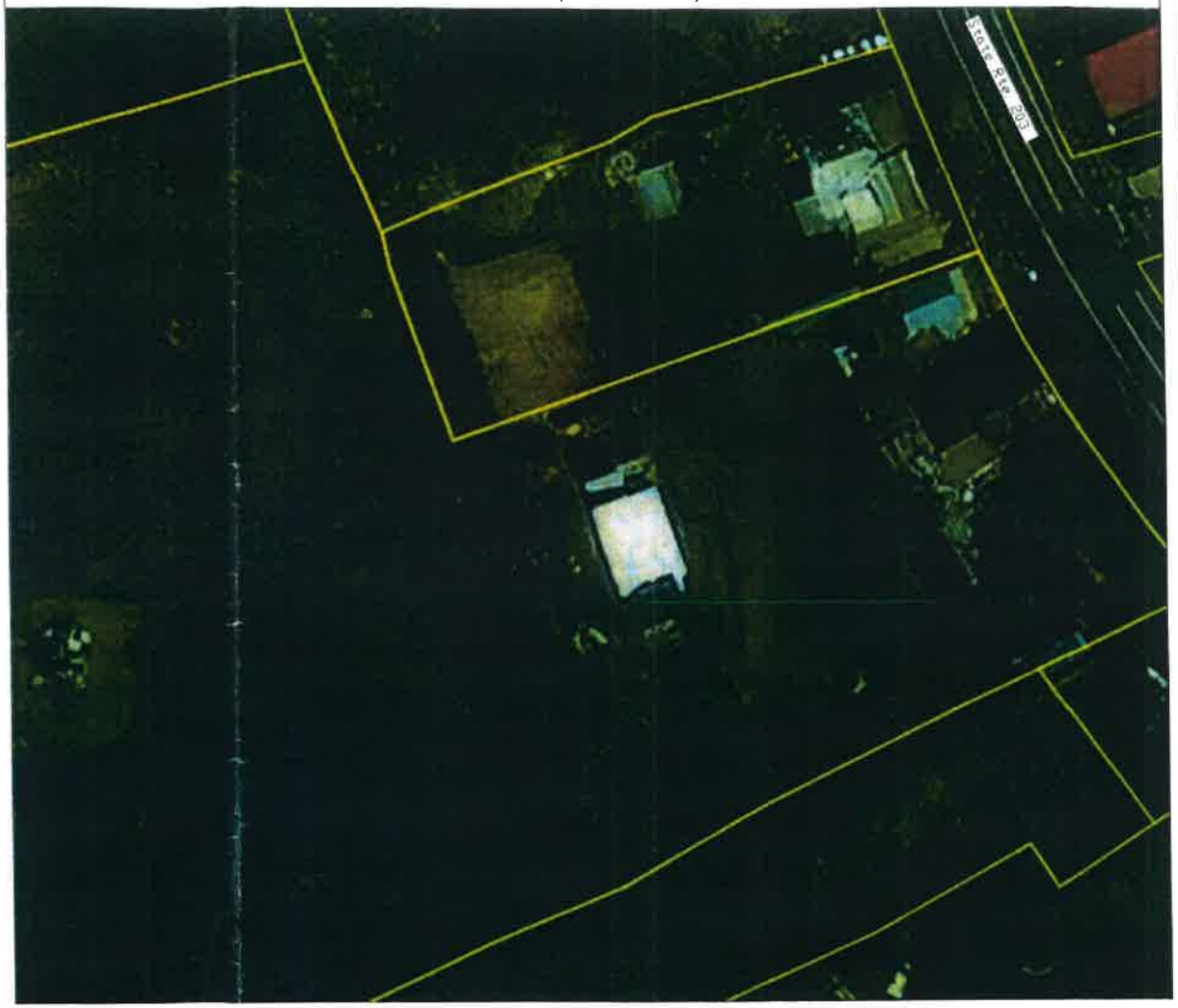

TITLE SHEET

PV-01

1 OF 4

suncommon

SUNCOMMON CONFIDENTIAL AND PROPRIETARY

SUNCOMMON
1155 FLATBUSH ROAD
KINGSTON, NEW YORK 12401
(866)-452-7652

MILLER
831 STATE ROUTE 203
SPENCERTOWN, NY 12165
TOWN OF AUSTERLITZ
COLUMBIA COUNTY
PHONE: 917-865-7106

PROJECT LOG

JOB	REV	DATE	NOTES
[illegible]	[illegible]	[illegible]	[illegible]

APPLICABLE CODES:

CONTRACTOR TO PERFORM ALL WORK IN ACCORDANCE WITH THE 2020 RESIDENTIAL CODE OF NEW YORK STATE

SYSTEM DETAILS

DC SYSTEM SIZE (kWdc):	21.75	MODULE (QTY) MODEL:	(50) LG430N2T-F6
AC SYSTEM SIZE (kW):	17.8	INVERTER (QTY) MODEL:	(2) SMA SB7.0-1SP-US-41 (1) SMA SB3.8-1SP-US-41
SERVICE SIZE (A):	200		
SERVICE TYPE:	OVERHEAD	UTILITY:	NYSEG

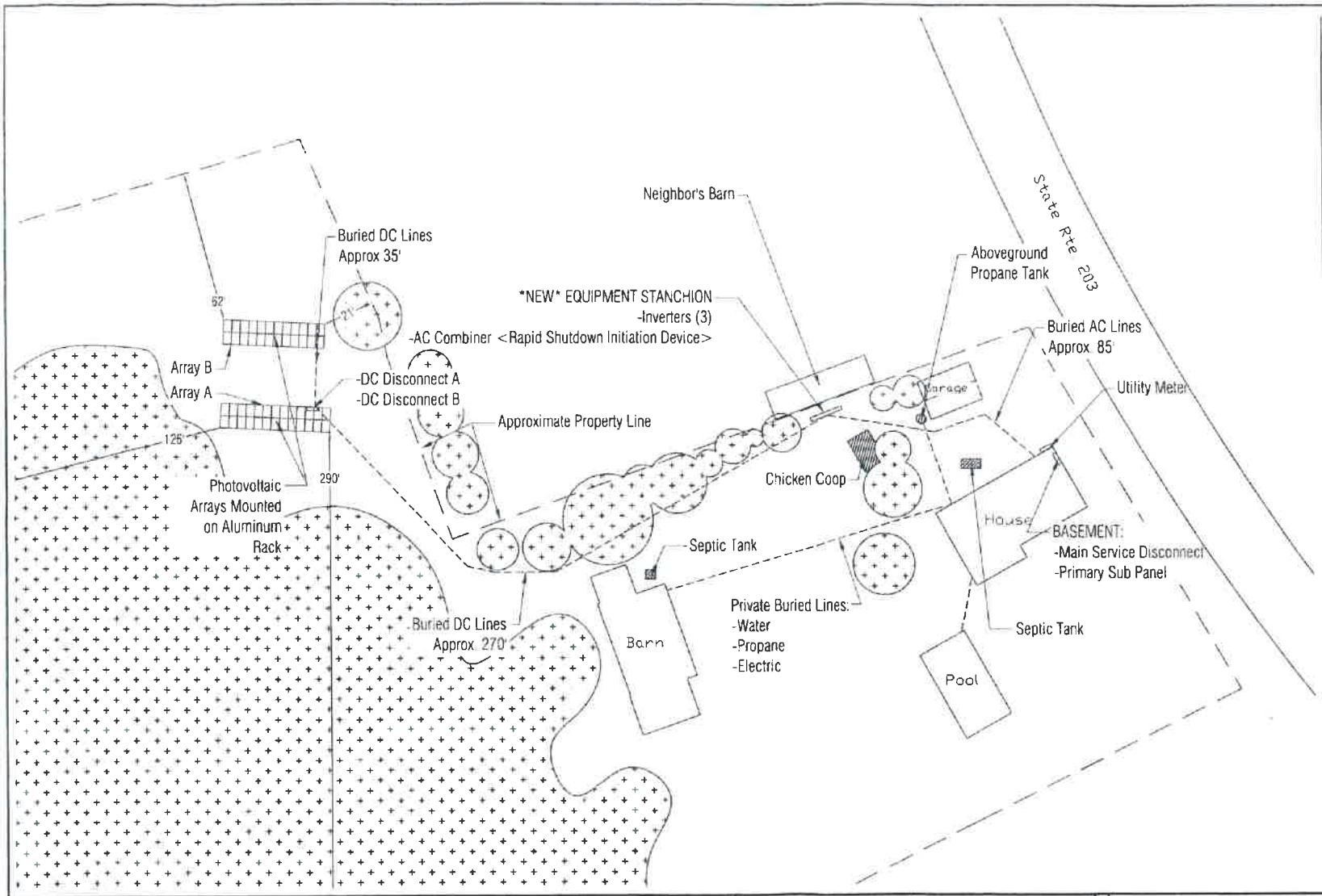

LEGEND

STRUCTURE OR ROAD

PARCEL LINE

BURIED LINE

EXISTING VEGETATION

OBSTRUCTIONS FOR TRENCH PATH

TRENCH DETAIL (IF APPLICABLE)

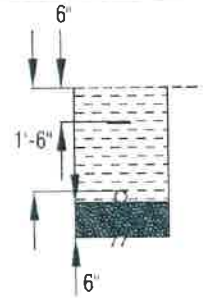

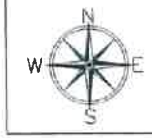

SCALE:
1" = 40'

SITE PLAN

PV-02

2 OF 4

suncommon

SUNCOMMON CONFIDENTIAL AND PROPRIETARY

SUNCOMMON
1155 FLATBUSH ROAD
KINGSTON, NEW YORK 12401
(866)-452-7652

MILLER
831 STATE ROUTE 203
SPENCERTOWN, NY 12165
TOWN OF AUSTERLITZ
COLUMBIA COUNTY
PHONE: 917-865-7106

PROJECT 106

DR	CK	DATE	NOTES
NA		[illegible]	ORIGINAL

APPLICABLE CODES:

CONTRACTOR TO PERFORM ALL WORK IN ACCORDANCE WITH THE 2020 RESIDENTIAL CODE OF NEW YORK STATE

SYSTEM DETAILS

DC SYSTEM SIZE (KWp)	29.75	MODULE (QTY) MODEL	(50) LG435N2T-E6
AC SYSTEM SIZE (KW)	19.8	INVERTER (QTY) MODEL	(2) SMA SB7.0-1SP-US-41 (1) SMA SB3.8-1SP-US-41
SERVICE SIZE (A)	200		
SERVICE TYPE	OVERHEAD	UTILITY	NYSEG

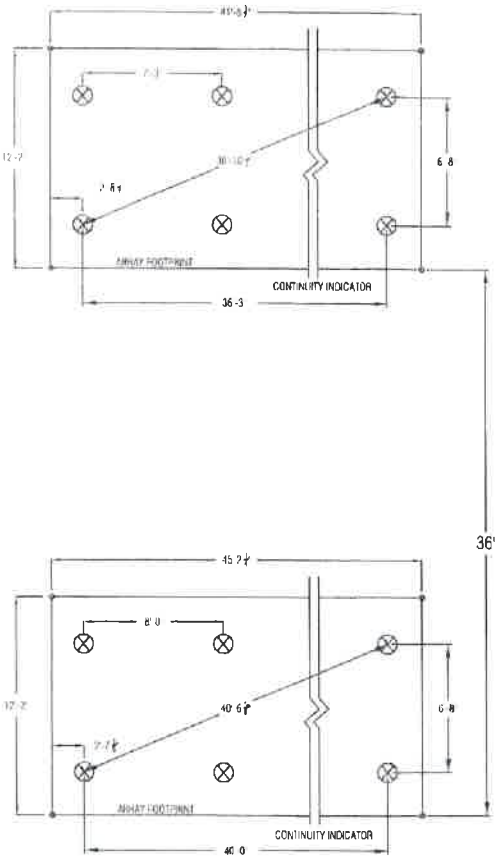

⊗ POST LOCATION

◦ ARRAY CORNERS MARKED ON SITE

⌇ ARRAY CONTINUATION INDICATOR

RACKING DETAIL VIEW

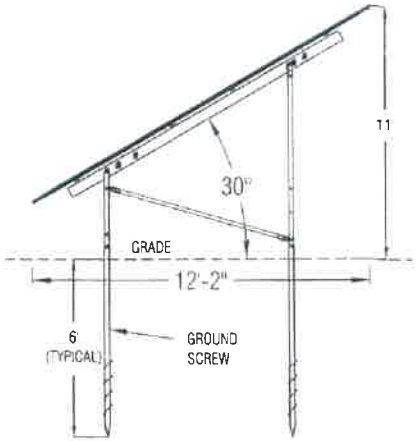

GROUND MOUNT DETAILS		
ARRAY SQUARE FOOTAGE:	550 FT²	507 FT²
MODULE DIMENSIONS (LENGTH X WIDTH X DEPTH):	83.9" X 41.6" X 1.57"	83.9" X 41.0" X 1.57"
RACKING TYPE:	APA READYRACK	APA READYRACK
PANEL CONFIGURATION	2 X 13	2 X 12
ARRAY AZIMUTH (TRUE °)	180	180
'A' - ARRAY LENGTH DIMENSION (FT-IN)	45' 2 1/4"	41'-8 1/4"
'B' - POST SPACING DIMENSION (FT-IN)	8'-0"	7'-3"
'C' - RAIL CANTILEVER DIMENSION (FT-IN)	2'-7 1/8"	2'-8 3/4"
'D' - PERIMETER E-W POST SPACING	36'-3"	36'-3"
'E' - HYPOTENUSE	40'-6 1/8"	38'-10 1/4"
MAX ALLOWABLE POST SPACING (FT-IN)	8'	8'
MAX ALLOWABLE CANTILEVER (FT-IN):	3'-3"	3'-3"

ARRAY LAYOUT

PV-03

3 OF 4

suncommon

SUNCOMMON CONFIDENTIAL AND PROPRIETARY

SUNCOMMON
1155 FLATBUSH ROAD
KINGSTON, NEW YORK 12401
(866)-452-7652

MILLER
831 STATE ROUTE 203
SPENCERTOWN, NY 12165
TOWN OF AUSTERLITZ
COLUMBIA COUNTY
PHONE: 917-865-7106

PROJECT LOG

INIT	REV	DATE	NOTES
[illegible]		[illegible]	[illegible]

APPLICABLE CODES

CONTRACTOR TO PERFORM ALL WORK IN ACCORDANCE WITH THE 2020 RESIDENTIAL CODE OF NEW YORK STATE

SYSTEM DETAILS			
DC SYSTEM SIZE (kWp):	21.75	MODULE (QTY) MODEL:	(50) LG435N2T-B
AC SYSTEM SIZE (kW):	17.0	INVERTER (QTY) MODEL:	(2) SMA 5000 (0-15)P-US-41 (1) SMA 3000 (8-15)P-US-41
SERVICE SIZE (A):	200		
SERVICE TYPE:	OVERHEAD	UTILITY:	NYSEG

New Equipment Stanchion

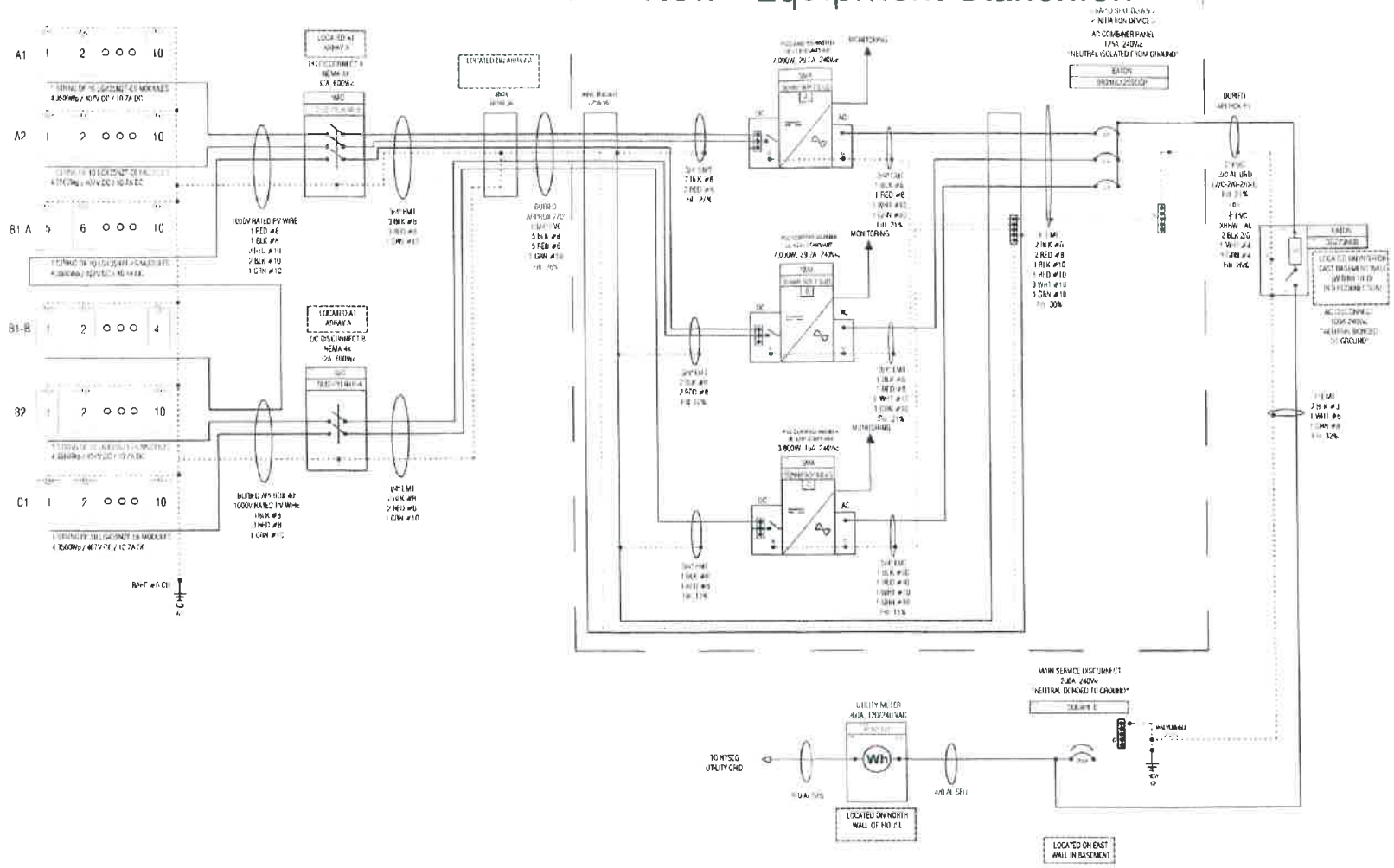

ELECTRICAL NOTES

1. ALL CONDUCTORS SIZED ACCORDING TO NEC–2017 TABLE 310.15(B)16/310.15(B)17 COPPER/AL CONDUCTOR, NEC–2017 310.15(B)(2)(A), 310.15(B)(3)(a), 310.15(B)(3)(c) AND ARTICLE 690.

2. ALL CONDUITS SIZED ACCORDING TO NEC–2017 TABLE 310.15(B)16/310.15(B)17 COPPER/AL CONDUCTOR, NEC–2017 310.15(B)(2)(A), 310.15(B)(3)(a), 310.15(B)(3)(c) AND CHAPTER 9, TABLE 4 & TABLE 5.

3. INSTALLER SHALL PROVIDE PERMANENT LABELS FOR THE PHOTOVOLTAIC SYSTEM IN ACCORDING TO NEC 2017, ARTICLE 690 AND 705.10. SEE ELECTRICAL LABEL DRAWING.

4. ALL CONDUITS AND WIRE SIZES SHOWN ARE MINIMUM REQUIRED SIZES. SITE CONDITIONS AND PROCUREMENT MAY DICTATE LARGER SIZES BEING USED, WITH ENGINEERING APPROVAL.

5. ALL EXPOSED PV WIRE MUST BE SECURELY FASTENED. ALL CONDUIT MUST BE SECURELY FASTENED AND SUPPORTED ACCORDING TO NEC–2017 ARTICLE 300.

6. ALL CONDUCTORS TO BE STRANDED THWN–2 CU UNLESS OTHERWISE NOTED.

UNGROUNDED CONDUCTOR INSULATION COLORS: BLACK, RED, BLUE, BROWN, ORANGE, YELLOW

7. GROUNDED CONDUCTOR INSULATION COLORS: WHITE, GREY, BLACK+WHITE STRIPE.

8. EQUIPMENT GROUNDING CONDUCTORS (EGC) / GROUNDING ELECTRODE CONDUCTORS (GEC) COLORS: GREEN, BARE.

9. GEC TO BE IRREVERSIBLY SPLICED OR EXOTHERMICALLY WELDED.

ELECTRICAL SCOPE DETAILS

1. SUNCOMMON TO ADD GROUNDING ELECTRODE AND G.E. CONDUCTOR FROM MAIN SERVICE DISCONNECT IF ONE IS NOT PRESENT.

ELECTRICAL DRAWING

PV–04

4 OF 4

suncommon

SUNCOMMON CONFIDENTIAL AND PROPRIETARY

SUNCOMMON
1155 FLATBUSH ROAD
KINGSTON, NEW YORK 12401
(866)-452-7652

MILLER
831 STATE ROUTE 203
SPENCERTOWN, NY 12165
TOWN OF AUSTERLITZ
COLUMBIA COUNTY
PHONE 917 865 7106

PROJECT LOG

ID	REV	DATE	NOTES

APPLICABLE CODES

CONTRACTOR TO PERFORM ALL WORK IN ACCORDANCE WITH THE 2020 RESIDENTIAL CODE OF NEW YORK STATE.

SYSTEM DETAILS

DC SYSTEM SIZE (kWp):	21.75	MODULE (QTY) MODEL:	(50) LG435N2T-E6
AC SYSTEM SIZE (kW):	17.8	INVERTER (QTY) MODEL:	(2) SMA SB7.0-1SP-US-41 (1) SMA SB3.8-1SP-US-41
SERVICE SIZE (A):	200		
SERVICE TYPE:	OVERHEAD	UTILITY:	NYSEG

PL-2022-10

Reginald Brantner

Represented by: Frederick Haley

Minor Subdivision

Town of Austerlitz
Planning Board
Application for Subdivision Review

Application Date: 4/12/2022

Applicant: (Property Owner)

Name: REGINALD BRANTNER Email: 100.HOOD42@yahoo.com

Street Address: 42 EAST HILL ROAD Mailing Address: P.O. Box 142

City: AUSTERLITZ State: NY Zip: 12017 Phone Number: 413-717-1725

Representative: (If Any)

Name: _____ Email: _____

Phone Number: _____

Surveyor or Engineer:

Name: FREDERICK J. HALLAN

Phone Number: 516-537-5844 License Number: NY 049953

Tax Map Number: _____

Property Location: (Brief Description of Location)

42 EAST HILL ROAD, AUSTERLITZ

Names of Abutting Property Owners:

SEE ABUTTERS LIST

Easements or Restriction:

NONE

The undersigned hereby requests approval by the Planning Board of the above identified subdivision Plat.

Signature: Reginald Brantner

Title: OWNER

Date: April 13, 2022

FOR OFFICE USE ONLY Project ID _____

SUBMISSION DATES and APPROVALS

Applic, Fees & Preliminary	Public Hearing	SEQRA Determination	Final Approval

TOWN OF AUSTERLITZ RECEIVED APR 19 2022 PLANNING BOARD COLUMBIA COUNTY

617.20
Appendix B
Short Environmental Assessment Form

Instructions for Completing

Part 1 - Project Information. The applicant or project sponsor is responsible for the completion of Part 1. Responses become part of the application for approval or funding, are subject to public review, and may be subject to further verification. Complete Part 1 based on information currently available. If additional research or investigation would be needed to fully respond to any item, please answer as thoroughly as possible based on current information.

Complete all items in Part 1. You may also provide any additional information which you believe will be needed by or useful to the lead agency; attach additional pages as necessary to supplement any item.

Part 1 - Project and Sponsor Information

LANDS OF REGINALD BRANTNER & DEBORAH BRANTNER JONES

Name of Action or Project:

MINOR 2 LOT SUBDIVISION

Project Location (describe, and attach a location map):

42 EAST HILL ROAD, AUSTERLITZ

TOWN OF AUSTERLITZ RECEIVED APR 19 2022 PLANNING BOARD COLUMBIA COUNTY

Brief Description of Proposed Action:

DIVIDING AN EXISTING PROPERTY USING THE CENTERLINE OF THE GREEN RIVER

Name of Applicant or Sponsor:	Telephone: 413-717-1725
	E-Mail: yvo.hoomzey@yahoo.com

Address:

42 EAST HILL ROAD

City/PO:	State:	Zip Code:
AUSTERLITZ	NY	12017

	NO	YES
1. Does the proposed action only involve the legislative adoption of a plan, local law, ordinance, administrative rule, or regulation? If Yes, attach a narrative description of the intent of the proposed action and the environmental resources that may be affected in the municipality and proceed to Part 2. If no, continue to question 2.	☒	☐
2. Does the proposed action require a permit, approval or funding from any other governmental Agency? If Yes, list agency(s) name and permit or approval:	☒	☐

3.a. Total acreage of the site of the proposed action? 10.324 acres
b. Total acreage to be physically disturbed? 0 acres
c. Total acreage (project site and any contiguous properties) owned or controlled by the applicant or project sponsor? 10.324 acres

4. Check all land uses that occur on, adjoining and near the proposed action.
☐ Urban ☐ Rural (non-agriculture) ☐ Industrial ☐ Commercial ☒ Residential (suburban)
☐ Forest ☐ Agriculture ☐ Aquatic ☐ Other (specify): _____
☐ Parkland

RESET

	NO	YES	N/A
5. Is the proposed action,			
a. A permitted use under the zoning regulations?	☐	☒	☐
b. Consistent with the adopted comprehensive plan?	☐	☒	☐

	NO	YES
6. Is the proposed action consistent with the predominant character of the existing built or natural landscape?	☐	☒
7. Is the site of the proposed action located in, or does it adjoin, a state listed Critical Environmental Area? If Yes, identify: _____	☒	☐
8. a. Will the proposed action result in a substantial increase in traffic above present levels?	☒	☐
b. Are public transportation service(s) available at or near the site of the proposed action?	☒	☐
c. Are any pedestrian accommodations or bicycle routes available on or near site of the proposed action?	☒	☐
9. Does the proposed action meet or exceed the state energy code requirements? If the proposed action will exceed requirements, describe design features and technologies: _____	☐	☒
10. Will the proposed action connect to an existing public/private water supply? If No, describe method for providing potable water: _____	☐	☒
11. Will the proposed action connect to existing wastewater utilities? If No, describe method for providing wastewater treatment: _____	☐	☒
12. a. Does the site contain a structure that is listed on either the State or National Register of Historic Places?	☒	☐
b. Is the proposed action located in an archeological sensitive area?	☒	☐
13. a. Does any portion of the site of the proposed action, or lands adjoining the proposed action, contain wetlands or other waterbodies regulated by a federal, state or local agency? SL-6	☐	☒
b. Would the proposed action physically alter, or encroach into, any existing wetland or waterbody? If Yes, identify the wetland or waterbody and extent of alterations in square feet or acres: _____	☒	☐

14. Identify the typical habitat types that occur on, or are likely to be found on the project site. Check all that apply:
☐ Shoreline ☐ Forest ☐ Agricultural/grasslands ☒ Early mid-successional
☒ Wetland ☐ Urban ☐ Suburban

	NO	YES
15. Does the site of the proposed action contain any species of animal, or associated habitats, listed by the State or Federal government as threatened or endangered?	☒	☐
16. Is the project site located in the 100 year flood plain?	☐	☒
17. Will the proposed action create storm water discharge, either from point or non-point sources? If Yes, a. Will storm water discharges flow to adjacent properties? ☐ NO ☐ YES	☒	☐
b. Will storm water discharges be directed to established conveyance systems (runoff and storm drains)? If Yes, briefly describe: ☐ NO ☐ YES _____		

RECEIVED APR 19 2022 PLANNING BOARD COLUMBIA COUNTY

RESET

	NO	YES
18. Does the proposed action include construction or other activities that result in the impoundment of water or other liquids (e.g. retention pond, waste lagoon, dam)? If Yes, explain purpose and size: _____	☒	☐
19. Has the site of the proposed action or an adjoining property been the location of an active or closed solid waste management facility? If Yes, describe: _____	☒	☐
20. Has the site of the proposed action or an adjoining property been the subject of remediation (ongoing or completed) for hazardous waste? If Yes, describe: _____	☒	☐

I AFFIRM THAT THE INFORMATION PROVIDED ABOVE IS TRUE AND ACCURATE TO THE BEST OF MY KNOWLEDGE

Applicant/sponsor name: REGINALD BRAUTNETT Date: April 13, 2022

Signature: Reginald Brautnett

Part 2 - Impact Assessment. The Lead Agency is responsible for the completion of Part 2. Answer all of the following questions in Part 2 using the information contained in Part 1 and other materials submitted by the project sponsor or otherwise available to the reviewer. When answering the questions the reviewer should be guided by the concept "Have my responses been reasonable considering the scale and context of the proposed action?"

	No, or small impact may occur	Moderate to large impact may occur
1. Will the proposed action create a material conflict with an adopted land use plan or zoning regulations?	☐	☐
2. Will the proposed action result in a change in the use or intensity of use of land?	☐	☐
3. Will the proposed action impair the character or quality of the existing community?	☐	☐
4. Will the proposed action have an impact on the environmental characteristics that caused the establishment of a Critical Environmental Area (CEA)?	☐	☐
5. Will the proposed action result in an adverse change in the existing level of traffic or affect existing infrastructure for mass transit, biking or walkway?	☐	☐
6. Will the proposed action cause an increase in the use of energy and it fails to incorporate reasonably available energy conservation or renewable energy opportunities?	☐	☐
7. Will the proposed action impact existing: a. public / private water supplies?	☐	☐
b. public / private wastewater treatment utilities?	☐	☐
8. Will the proposed action impair the character or quality of important historic, archaeological, architectural or aesthetic resources?	☐	☐
9. Will the proposed action result in an adverse change to natural resources (e.g., wetlands, waterbodies, groundwater, air quality, flora and fauna)?	☐	☐

TOWN OF AUSTERLITZ
RECEIVED
APR 19 2022
PLANNING BOARD
COLUMBIA COUNTY

RESET

	No, or small impact may occur	Moderate to large impact may occur
10. Will the proposed action result in an increase in the potential for erosion, flooding or drainage problems?	☐	☐
11. Will the proposed action create a hazard to environmental resources or human health?	☐	☐

Part 3 - Determination of significance. The Lead Agency is responsible for the completion of Part 3. For every question in Part 2 that was answered "moderate to large impact may occur", or if there is a need to explain why a particular element of the proposed action may or will not result in a significant adverse environmental impact, please complete Part 3. Part 3 should, in sufficient detail, identify the impact, including any measures or design elements that have been included by the project sponsor to avoid or reduce impacts. Part 3 should also explain how the lead agency determined that the impact may or will not be significant. Each potential impact should be assessed considering its setting, probability of occurring, duration, irreversibility, geographic scope and magnitude. Also consider the potential for short-term, long-term and cumulative impacts.

☐ Check this box if you have determined, based on the information and analysis above, and any supporting documentation, that the proposed action may result in one or more potentially large or significant adverse impacts and an environmental impact statement is required.

☐ Check this box if you have determined, based on the information and analysis above, and any supporting documentation, that the proposed action will not result in any significant adverse environmental impacts.

Name of Lead Agency	Date
Print or Type Name of Responsible Officer in Lead Agency	Title of Responsible Officer
Signature of Responsible Officer in Lead Agency	Signature of Preparer (if different from Responsible Officer)

TOWN OF AUSTERLITZ
RECEIVED
APR 19 2022
PLANNING BOARD
COLUMBIA COUNTY

PRINT

RESET

BRANTNER MINOR 2 LOT SUBDIVISION, PLANNING BOARD
ABUTTERS LIST

April 12, 2022

Reginald Brantner & Deborah Brantner Jones
P.O. Box 142
Austerlitz, NY 12017
TM# 88.-2-13 (Parcel being Subdivided)

Andrea Weiss & Gretta Schiller
330 W 28th St., Apt. 8-B
New York, NY 10001
TM# 88.-1-6.1

Desmond Patton & Jeffrey Keyes
560 Riverside Dr., Apt. 14-F
New York, NY 10027
TM# 88.-1-10.1

Austerlitz Historical Society
P.O. Box 144
Austerlitz, NY 12017
TM# 88.-1-16.2

49 East Houston St. Corp.
20 Prince St., Apt. 31
New York, NY 10012
TM# 88.-1-15

Peter Schiffer & Kristen Schiffer
11608 Route 22
Austerlitz, NY 12017
TM# 88.-1-14

Daniel Palladino & Shandra Palladino
11622 state Route 22
Austerlitz, NY 12017
TM# 88.-1-31.2

Shaina A. Loew-Banayan & BettinaB. Loew Banayan
33 East Hill Road
Austerlitz, NY 12017
TM# 88.-1-29

BWV1052 LLC
228 Park Ave. South Apt. 57405
New York, NY 10003
TM# 88.-1-31.111 & 31.112

TOWN OF AUSTERLITZ
RECEIVED
APR 19 2022
PLANNING BOARD
COLUMBIA COUNTY

BRANTNER MINOR 2 LOT SUBDIVISION APPLICATION
ABUTTERS LETTER

April 12, 2022

Re: Minor 2 Lot Subdivision Application before the Austerlitz Planning Board

Dear Abutters:

This letter is to notify you that the Austerlitz Planning Board will be holding a Public Hearing on behalf of Reginald Brantner & Deborah Brantner Jones for the purpose of permitting a Minor 2 Lot Subdivision of their property. The property is located at 42 East Hill Road in the Town of Austerlitz.

The Public Hearing will take place on June 2, 2022 at 7:00 pm at the Austerlitz Town Hall, Route 203, Spencertown. Anyone wishing to speak will be given an opportunity to be heard.

More information is available by contacting the Planning/Zoning Clerk at 518-392-3260.

Sincerely,

Frederick J. Haley PLS
authorized representative

TOWN OF AUSTERLITZ
RECEIVED
APR 19 2022
PLANNING BOARD
COLUMBIA COUNTY

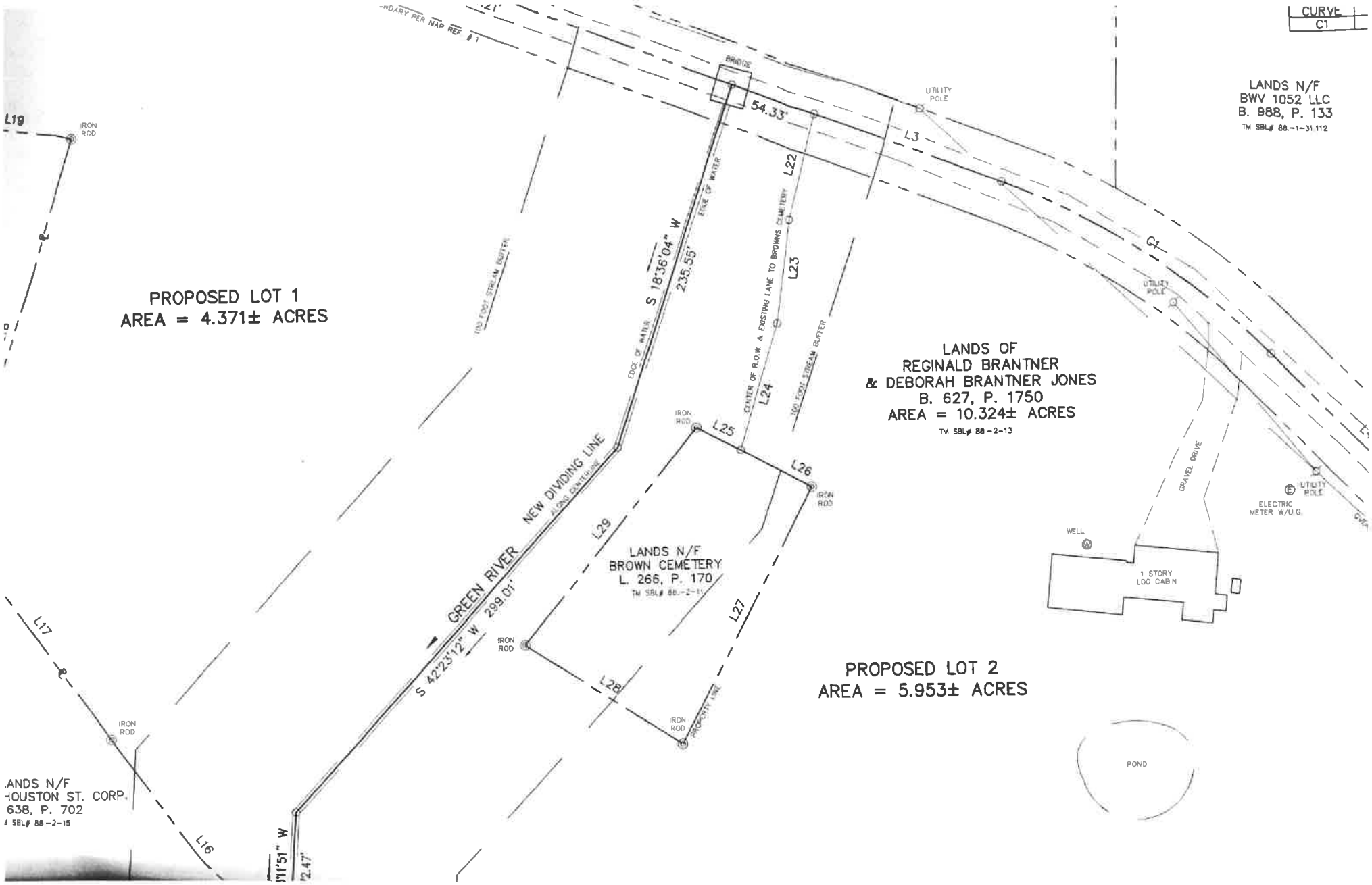
CURVE
C1
LANDS N/F
BWV 1052 LLC
B. 988, P. 133
TM SBL# 88.-1-31.112
BRIDGE
54.33'
L3
UTILITY POLE
L22
L23
L24
L25
L26
L27
L28
L29
L19
L17
L16
IRON ROD
S 18°36'04" W
235.55'
EDGE OF WATER
CENTER OF R.O.W. & EXISTING LANE TO BROWNS CEMETERY
100 FOOT STREAM BUFFER
PROPOSED LOT 1
AREA = 4.371± ACRES
LANDS OF
REGINALD BRANTNER
& DEBORAH BRANTNER JONES
B. 627, P. 1750
AREA = 10.324± ACRES
TM SBL# 88-2-13
GRAVEL DRIVE
ELECTRIC METER W/U.G.
WELL
1 STORY LOG CABIN
NEW DIVIDING LINE
GREEN RIVER
S 42°23'12" W 299.01'
LANDS N/F
BROWN CEMETERY
L. 266, P. 170
PROPERTY LINE
PROPOSED LOT 2
AREA = 5.953± ACRES
POND
LANDS N/F
HOUSTON ST. CORP.
638, P. 702
SBL# 88-2-15